Send to:
G.N. Kurac

A & P

CAROLINA'S

PLANOGRAMS

51851 7321

Source: https://www.industrydocuments.ucsf.edu/docs/gmpn0000

A'& P STORES 4' x 5' PLAN 1

RJR FLEX system

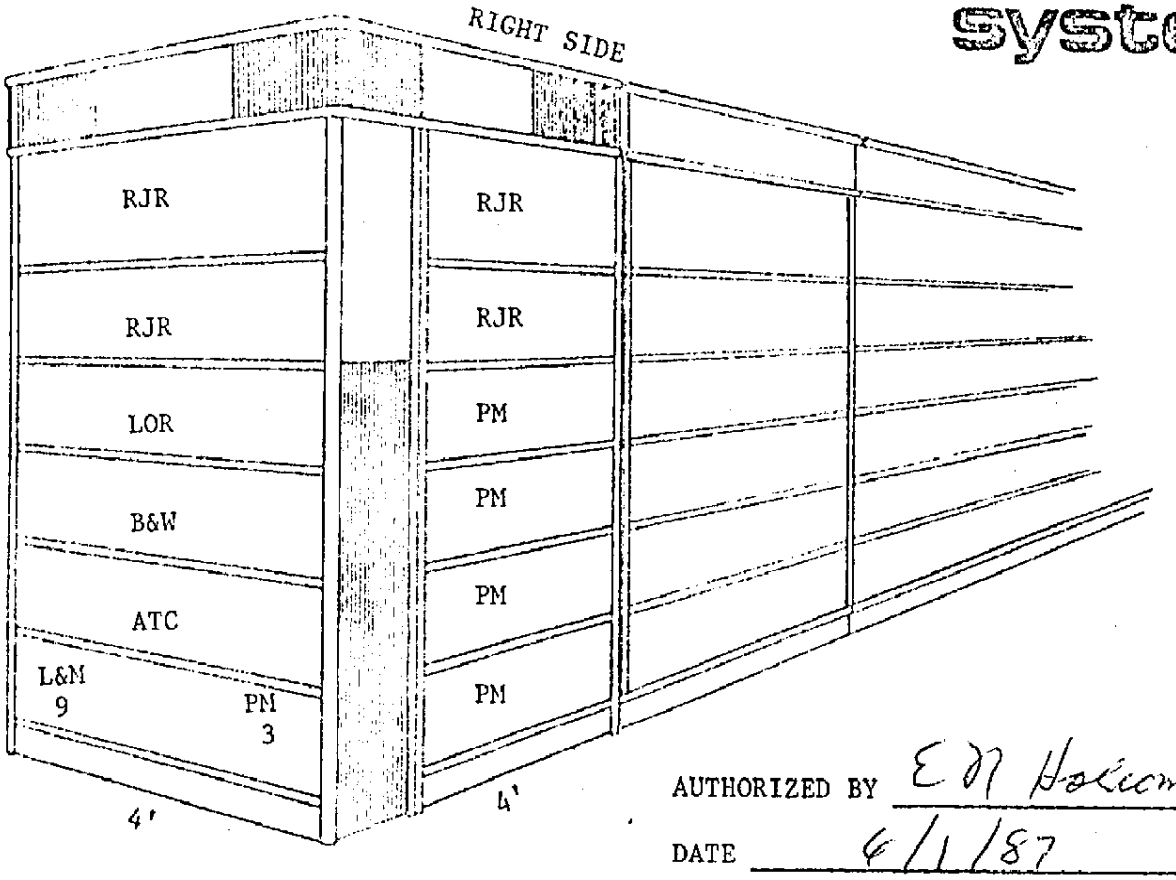

AUTHORIZED BY E M Holcombe

DATE 6/1/87

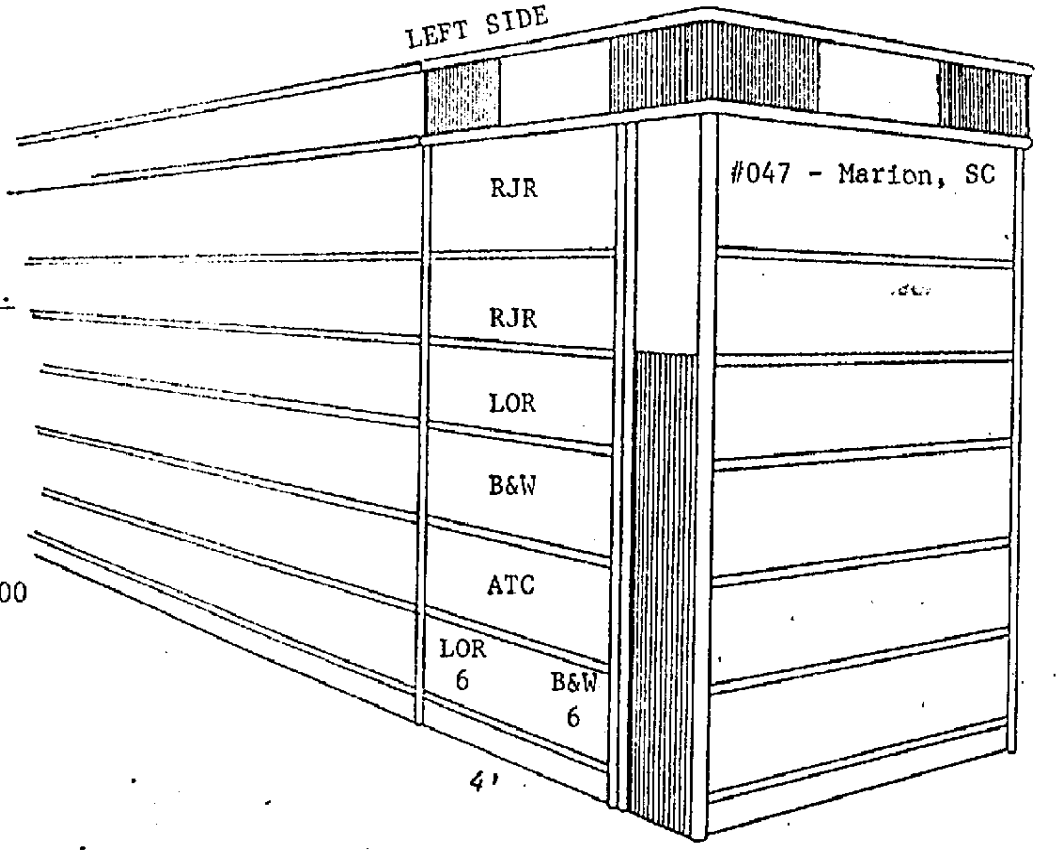

CO.	ROWS	$/MO.
RJR	78	234.
LOR	30	126.
B&W	30	93.
ATC	26	70.
PM	55	89.
L&M	9	18.
Total		$630.00

51851 7322

Source: https://www.industrydocuments.ucsf.edu/docs/gmpn0000

A & P STORES 4' x 11' PLAN 2

RJR Flex System

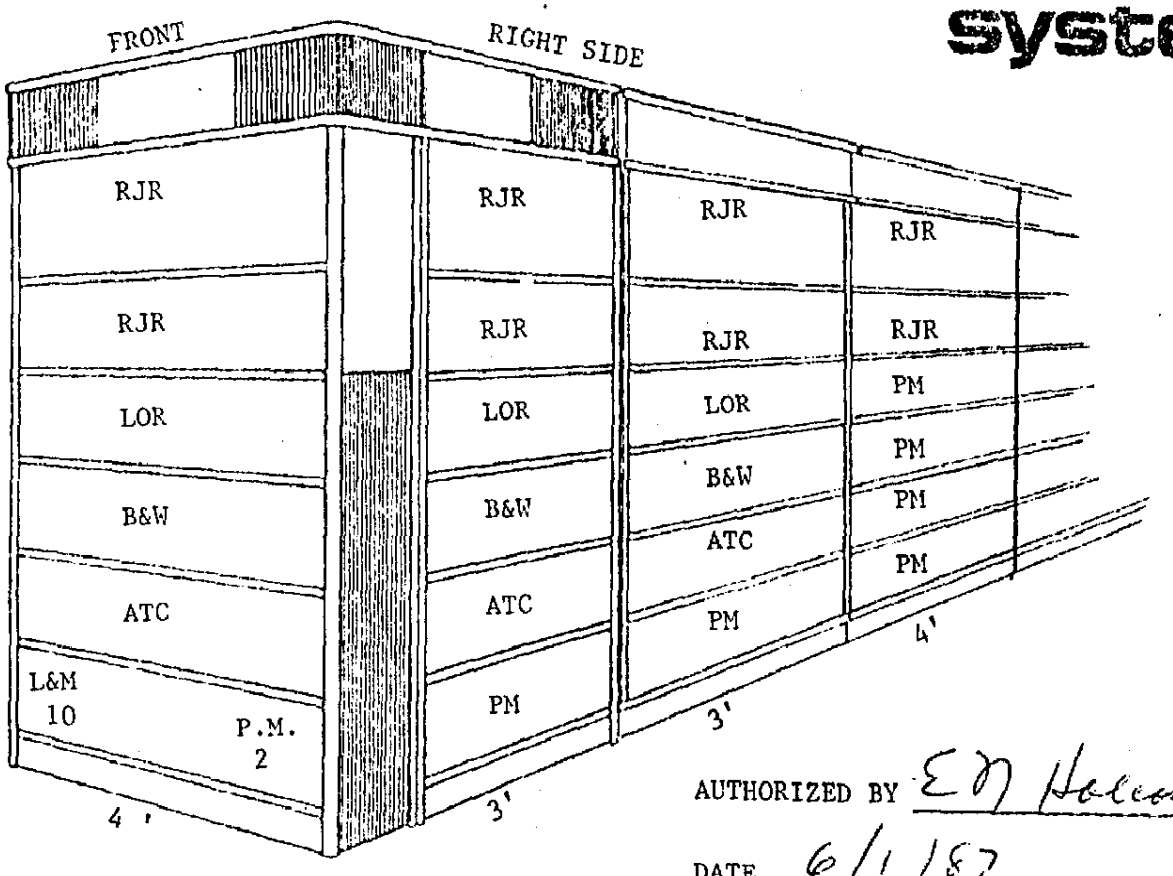

AUTHORIZED BY E M Holcombe

DATE 6/1/87

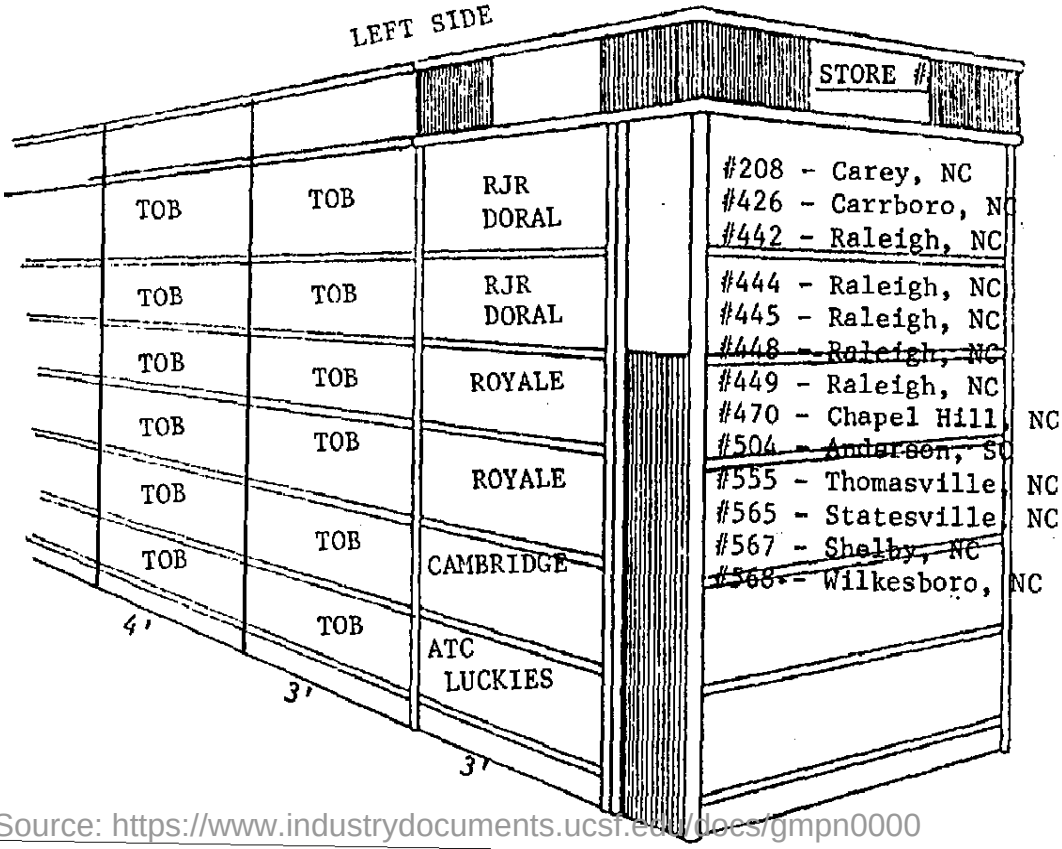

CO.	ROWS	$/MO
RJR	88	264.
DORAL	18	40.
LOR	30	126.
B&W	30	93.
ATC	40	112.
PM	72	157.
CAMB.	9	27
L&M	10	20.
		$839.00

51851 7323

Source: https://www.industrydocuments.ucsf.edu/docs/gmpn0000

A & P STORES

4' x 11'
4' Generic
3' Tobacco

PLAN 3

RJR FLEX system

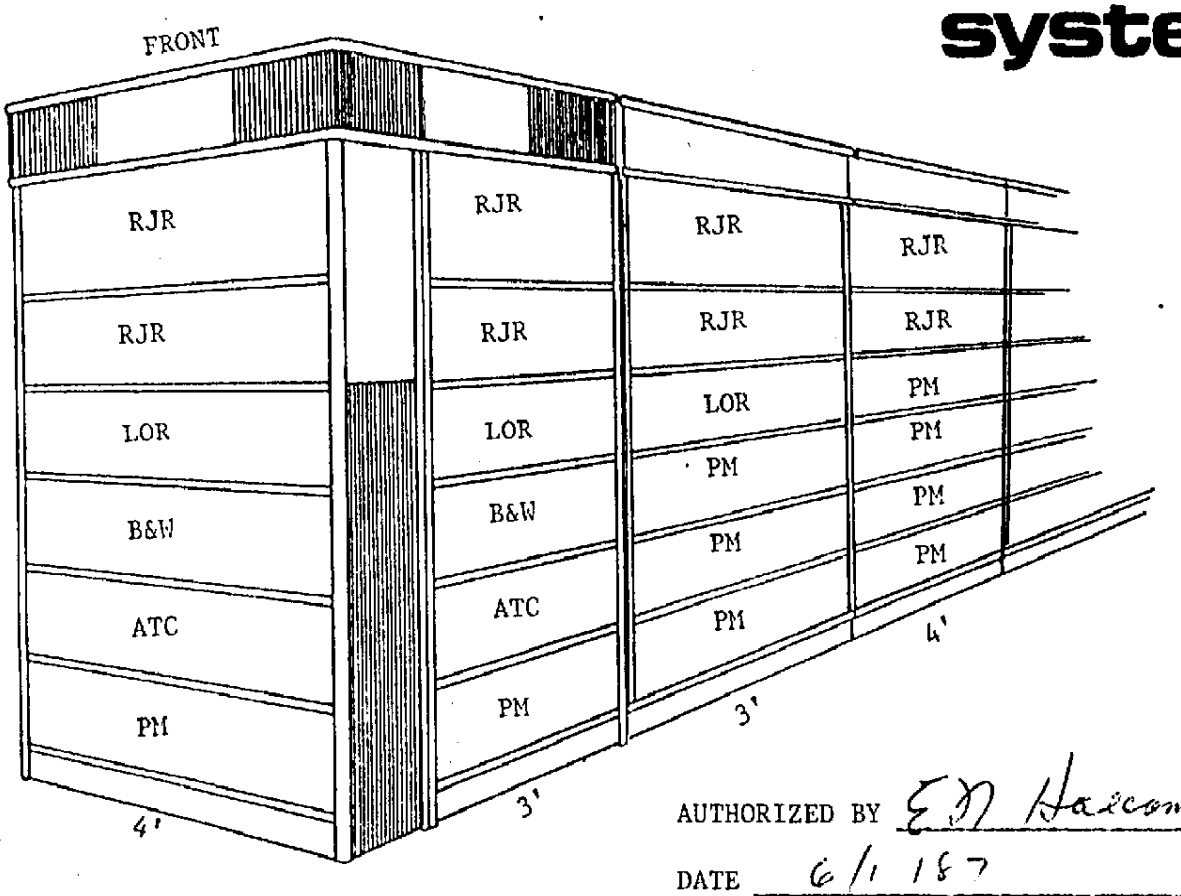

AUTHORIZED BY E M Hancock

DATE 6/1 87

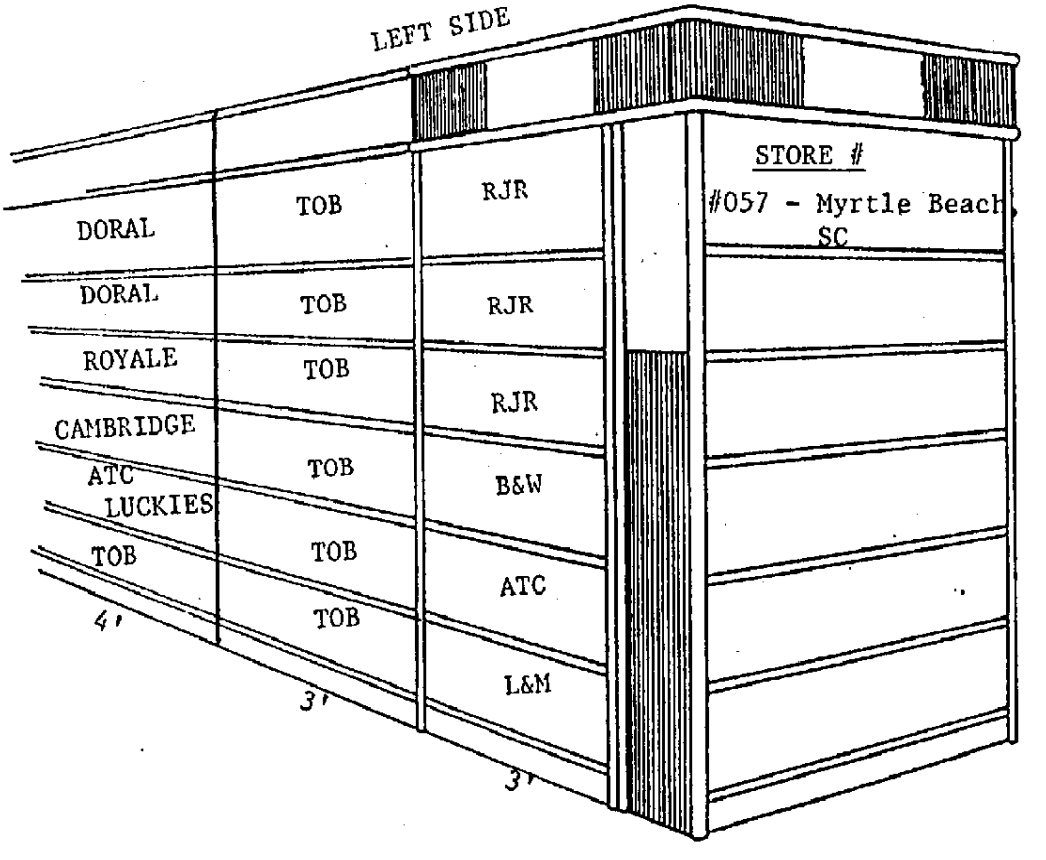

CO.	ROWS	$/MO.
RJR	115	345.
DORAL	26	40.
LOR	30	126.
B&W	30	93.
ATC	44	124.
PM	101	269.
CAMB.	13	39.
L&M	9	18.
		$1054.00

51851 7324

Source: https://www.industrydocuments.ucsf.edu/docs/gmpn0000

A & P STORES 4' x 10' PLAN 4

RJR FLEX system

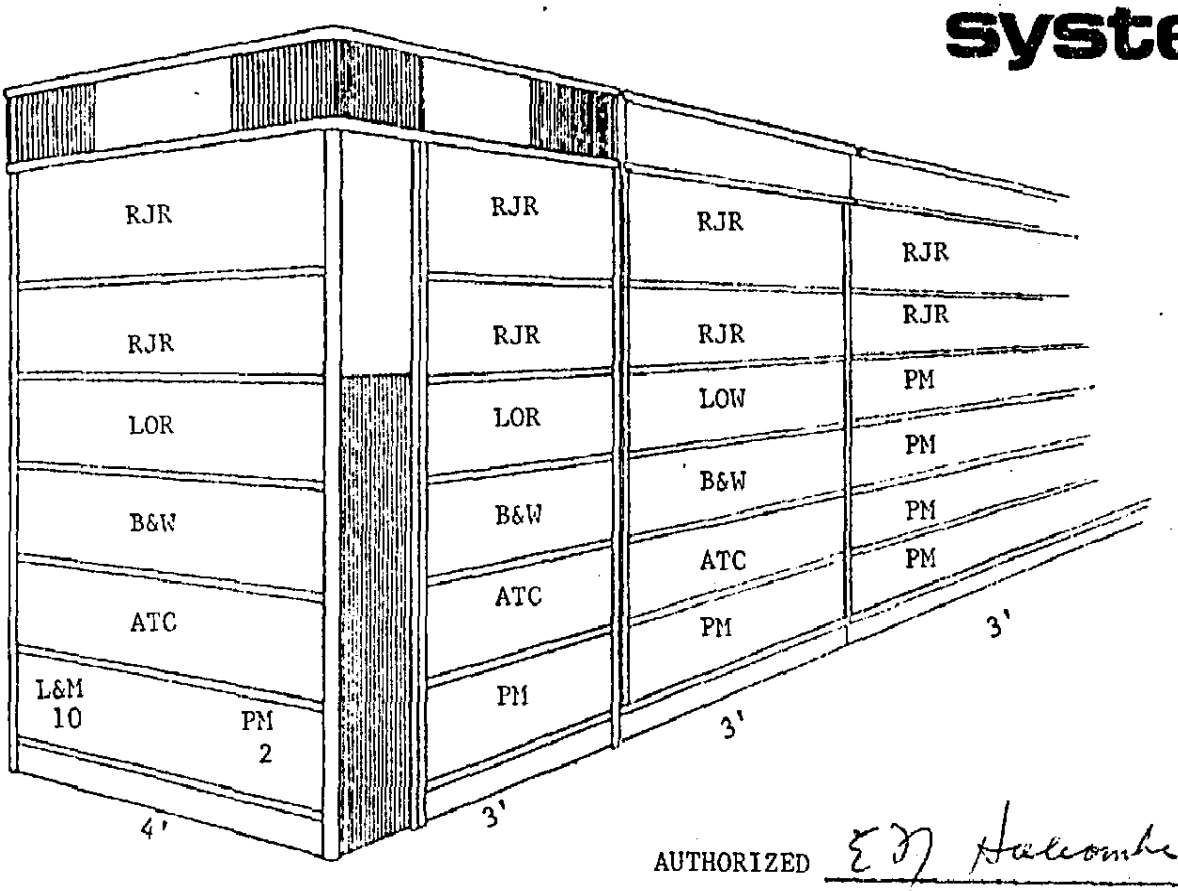

AUTHORIZED EM Holcombe

DATE 6/1/87

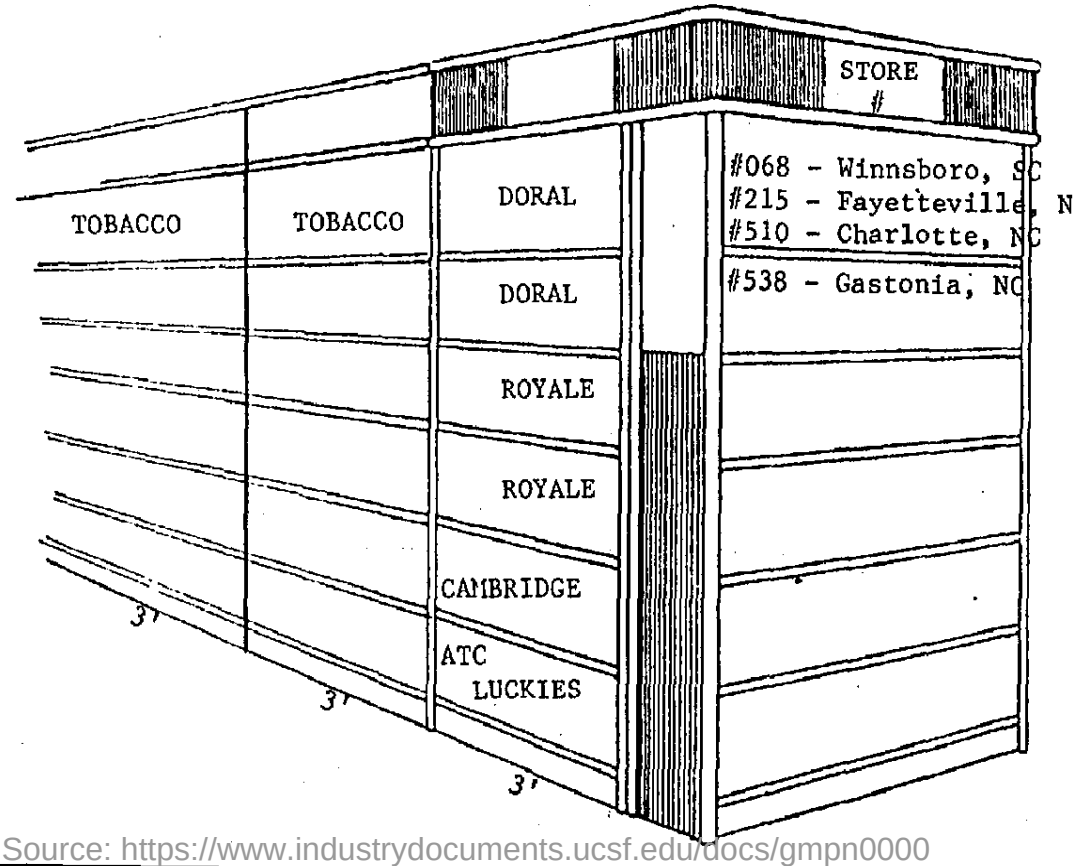

CO.	ROWS	$/MO.
RJR	80	$240
DORAL	18	40
LOR	30	126
B&W	30	93
ATC	40	112
PM	56	93
CAMB.	9	27
L&M	10	20
		$751.00

51851 7325

Source: https://www.industrydocuments.ucsf.edu/docs/gmpn0000

A & P STORES 4' x 10' PLAN 5

6' Tob.
3' Generic

RJR FLEX system

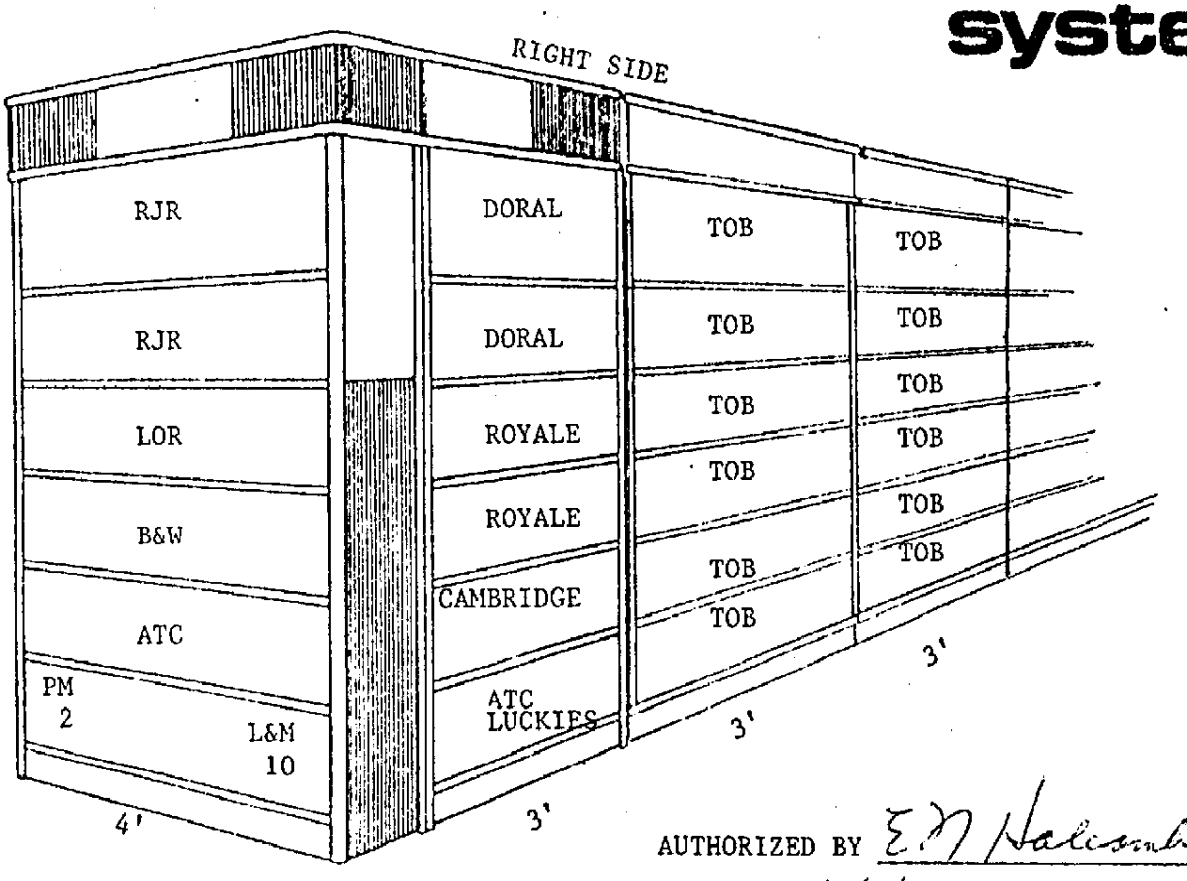

AUTHORIZED BY E.M Halcombe

DATE 6/1/87

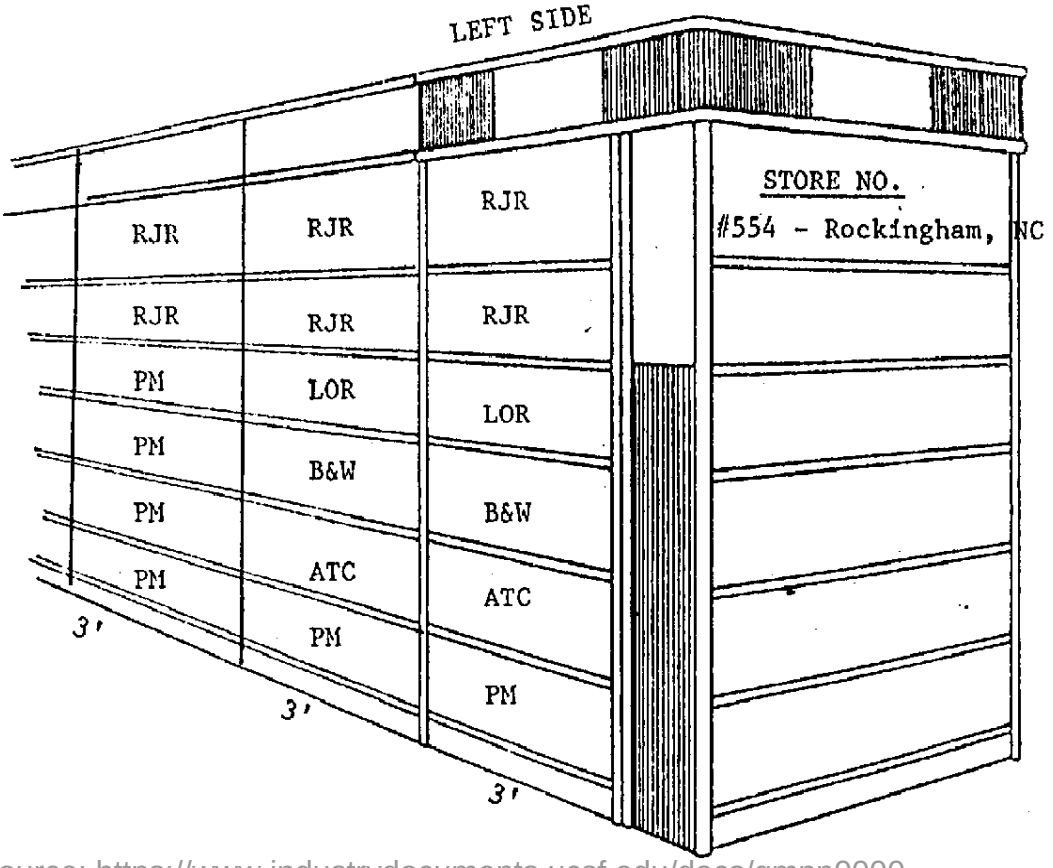

CO.	ROWS	$/MO
RJR	80	240.
DORAL	18	40
LOR	30	126.
B&W	30	93.
ATC	40	112.
PM	56	93.
CAMB.	9	27.
L&M	10	20.
		$751.00

51851 7326

Source: https://www.industrydocuments.ucsf.edu/docs/gmpn0000

RJR FLEX system

A & P STORES 4' x 9' PLAN 6

5½' Tob.
2½' Generic

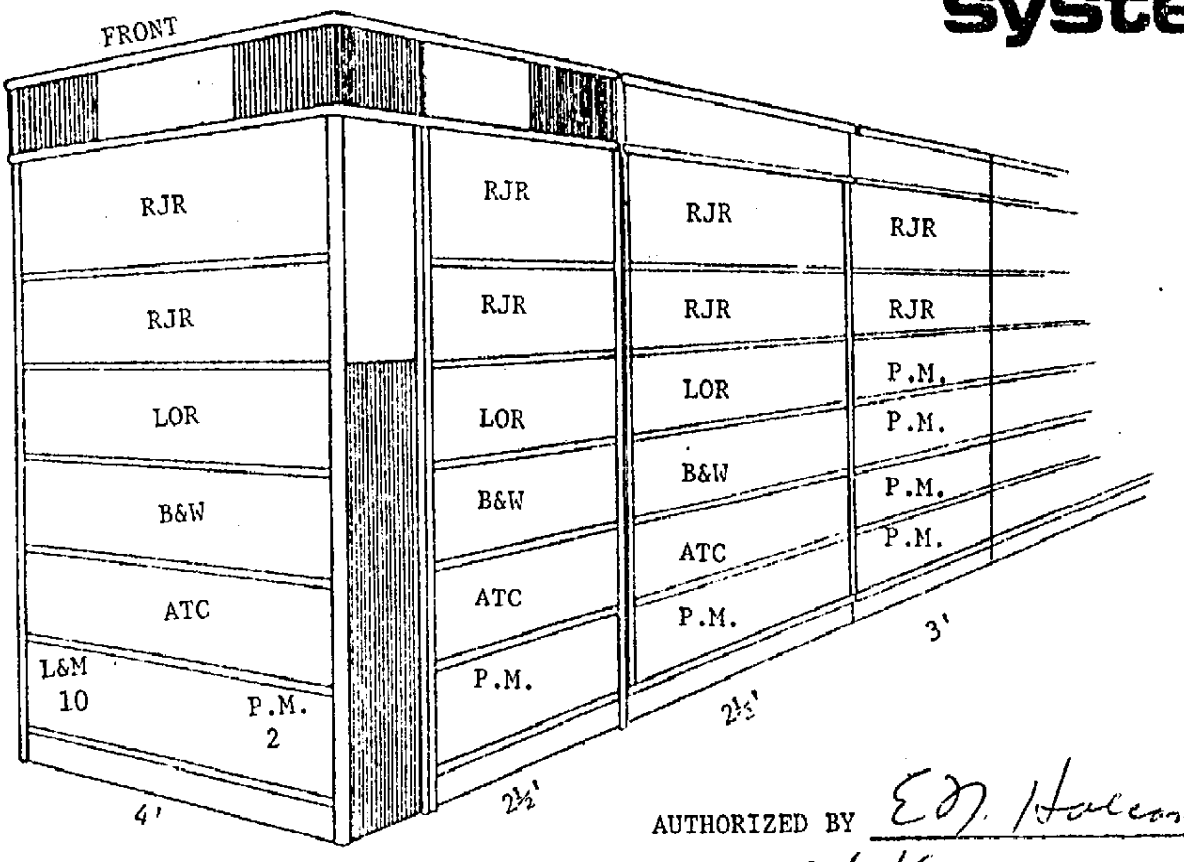

AUTHORIZED BY E.J. Holcombe

DATE 6/1/87

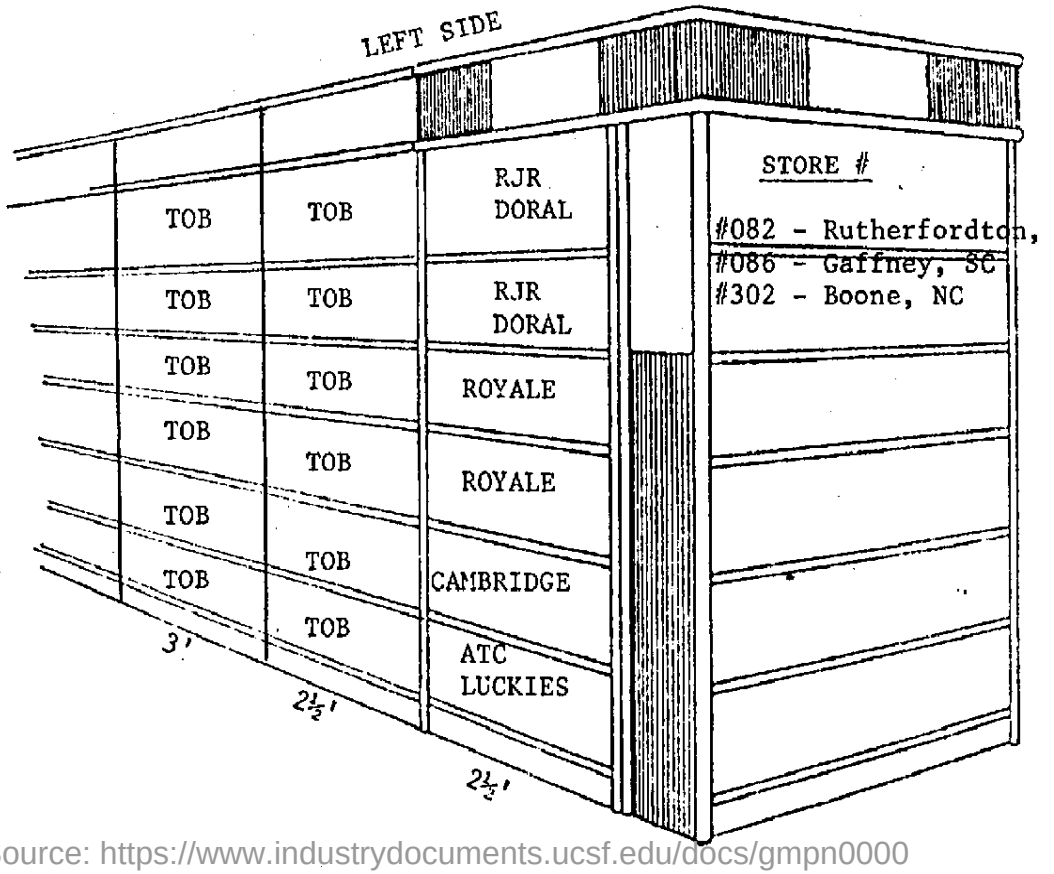

STORE #

#082 - Rutherfordton, NC
#086 - Gaffney, SC
#302 - Boone, NC

CO.	ROWS	$/MO.
RJR	76	$228.
DORAL	16	40.
LOR	28	116.
B&W	28	89
ATC	37	103
PM	54	85
CAMB.	9	27
L&M	10	20
		$708.

51851 7327

Source: https://www.industrydocuments.ucsf.edu/docs/gmpn0000

A & P STORES 4' x 9' PLAN 7

3' Tob
2½' Generic

RJR FLEX system

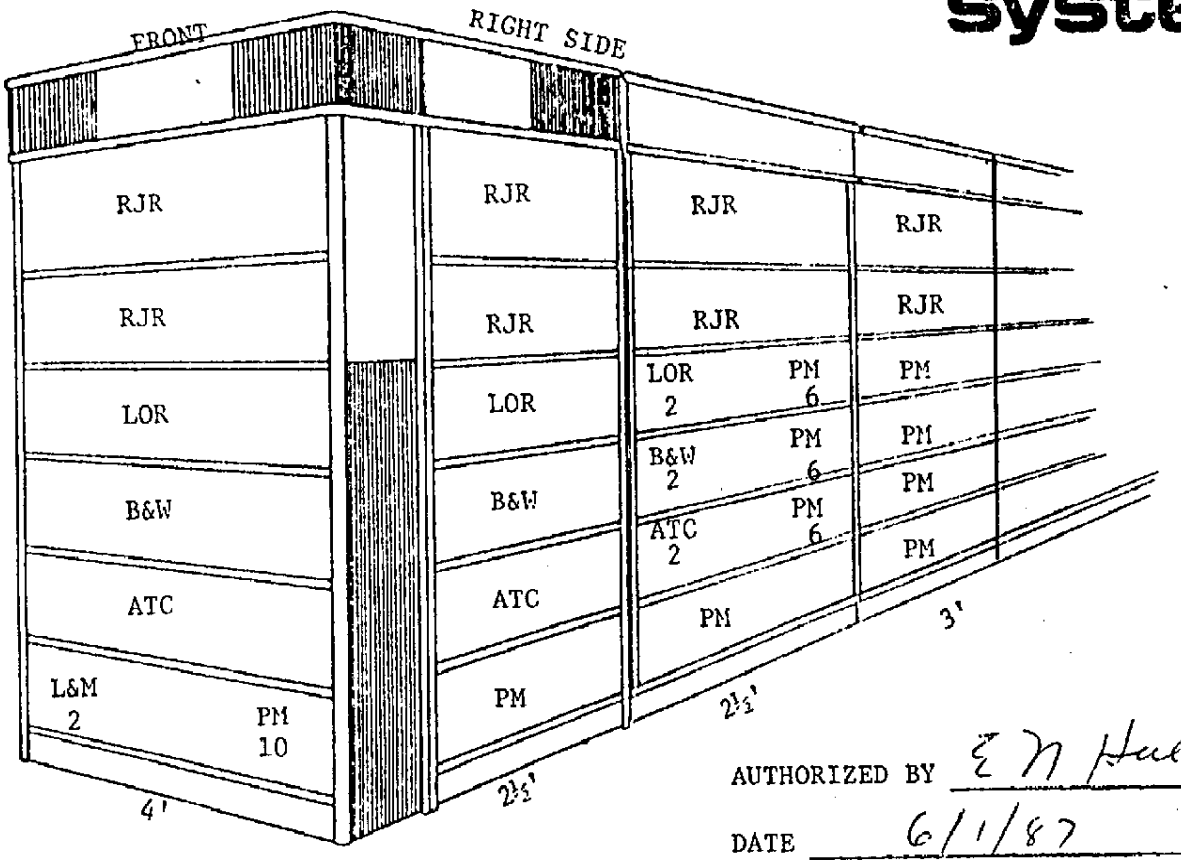

AUTHORIZED BY E M Holcombe

DATE 6/1/87

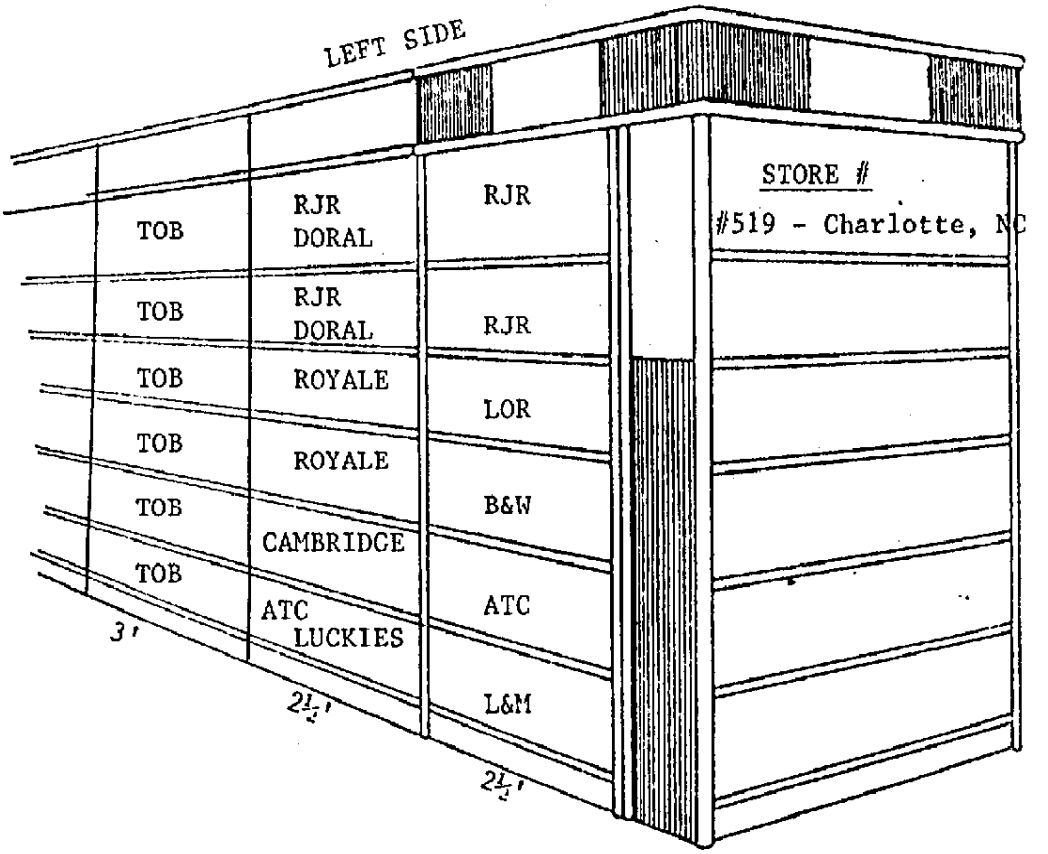

CO.	ROWS	$/MO.
RJR	92	$276.
DORAL	16	40.
LOR	30	126.
B&W	30	93.
ATC	39	109.
PM	80	189.
CAMB.	8	24.
L&M	10	20.
		$877.

51851 7328

Source: https://www.industrydocuments.ucsf.edu/docs/gmpn0000

A & P STORES 4' x 8½' PLAN 8

RJR FLEX system

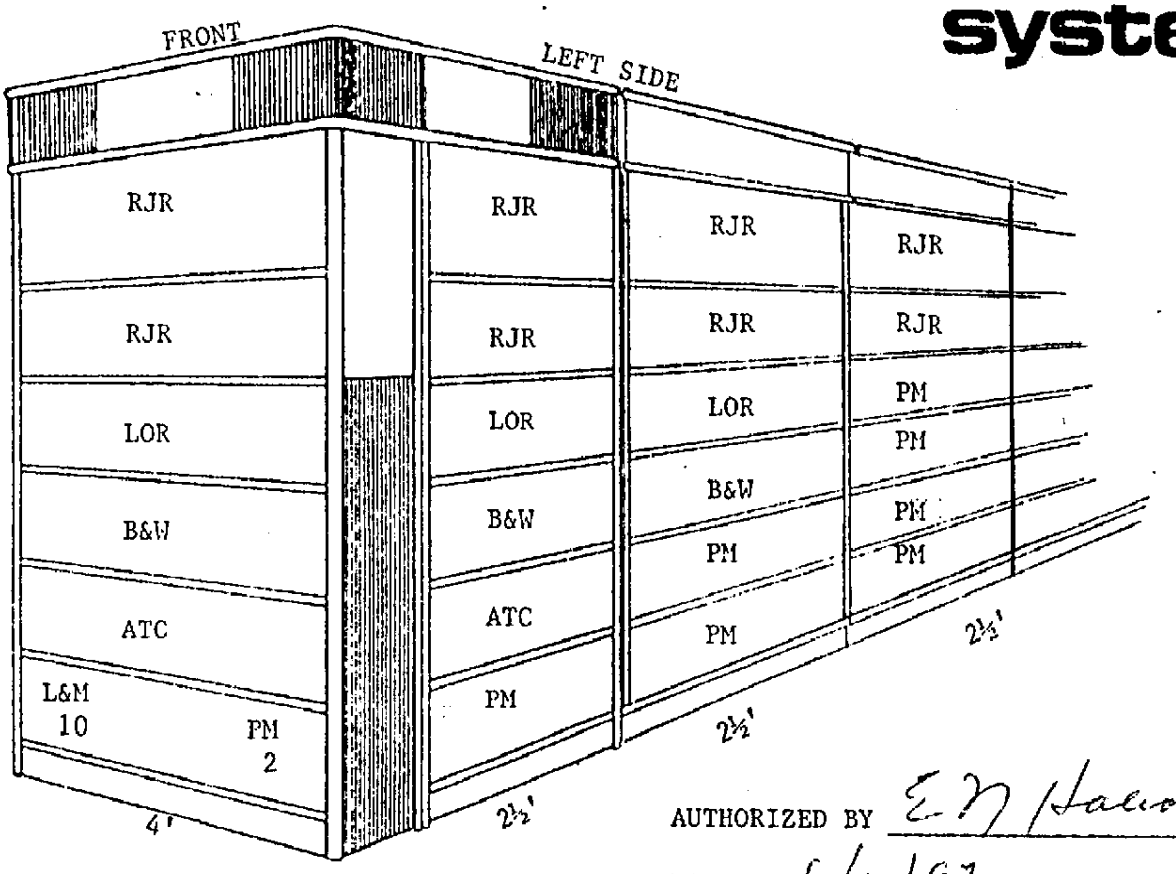

AUTHORIZED BY E M Halcombe

DATE 6/1/87

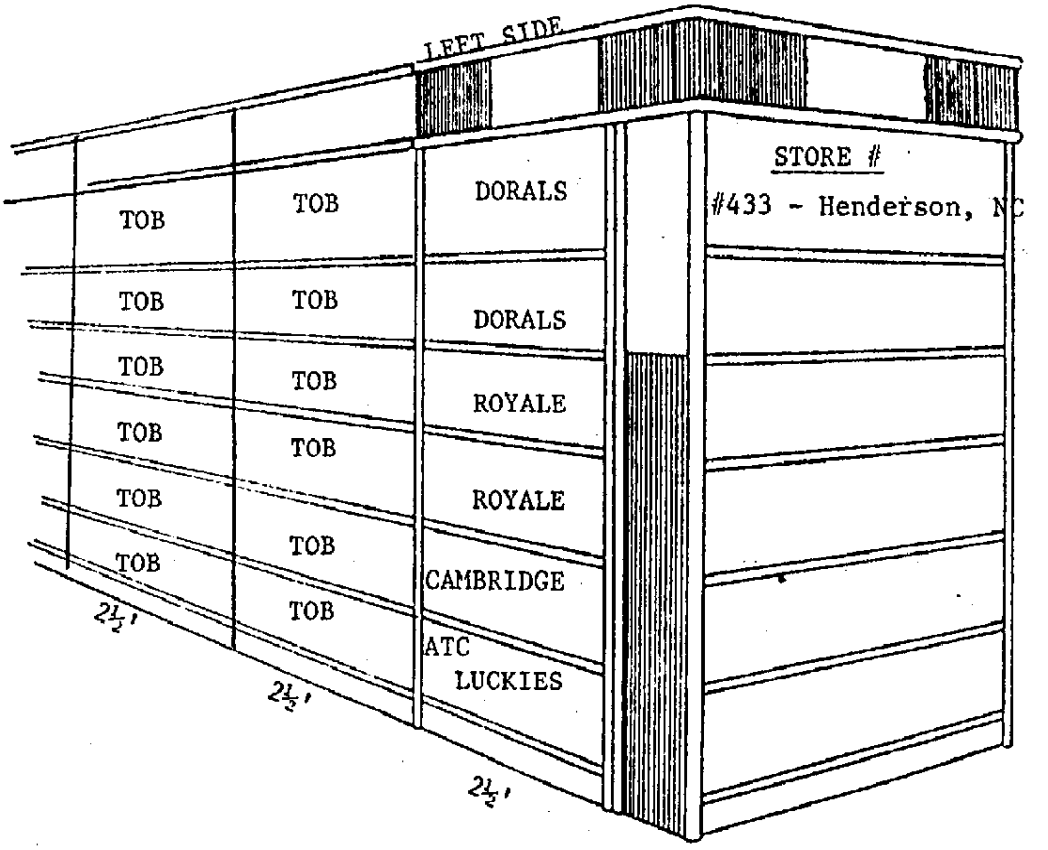

CO.	ROWS	$/MO.
RJR	74	222.
DORAL	16	40.
LOR	28	116.
B&W	28	89.
ATC	29	79.
PM	58	101
CAMB.	8	24.
L&M	10	20.
		$691.00

51851 7329

Source: https://www.industrydocuments.ucsf.edu/docs/gmpn0000

A & P STORES 4' x 8' PLAN 9

RJR FLEX system

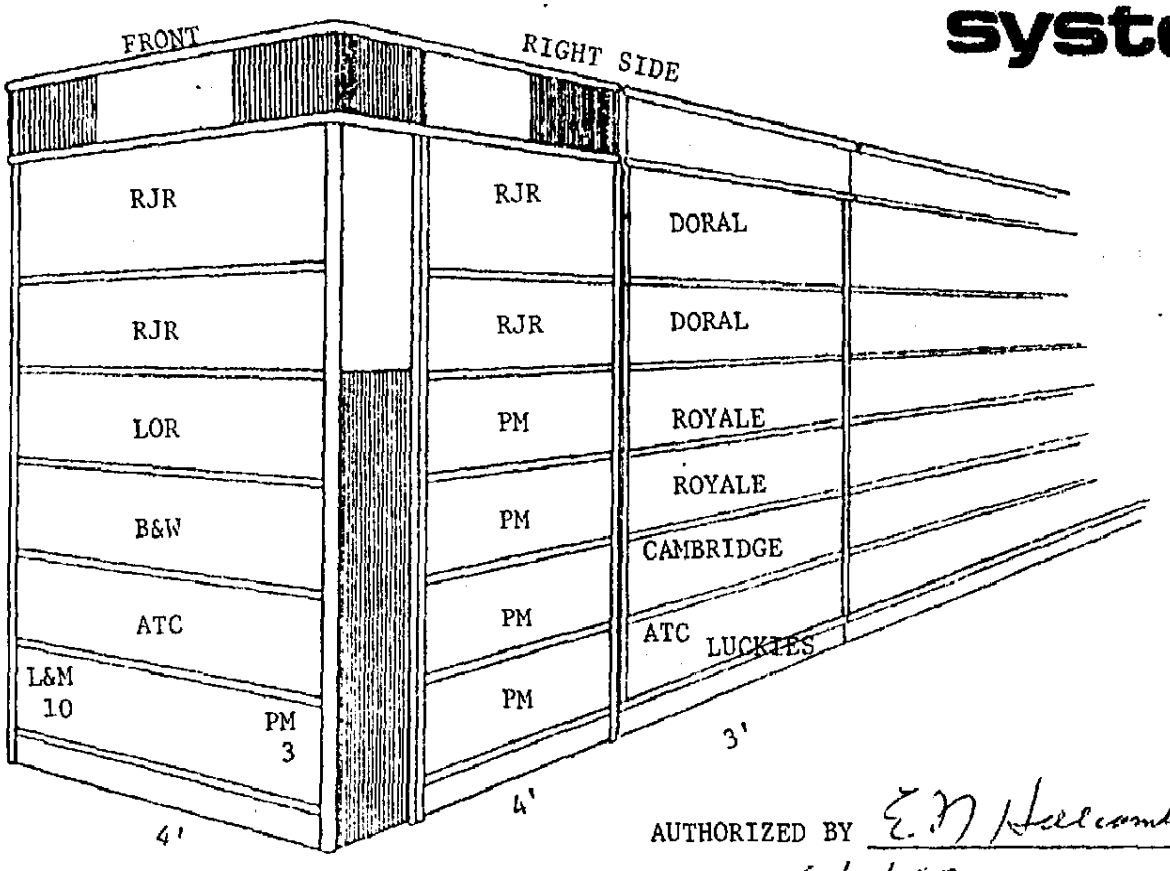

AUTHORIZED BY E.M. Holcombe

DATE 6/1/87

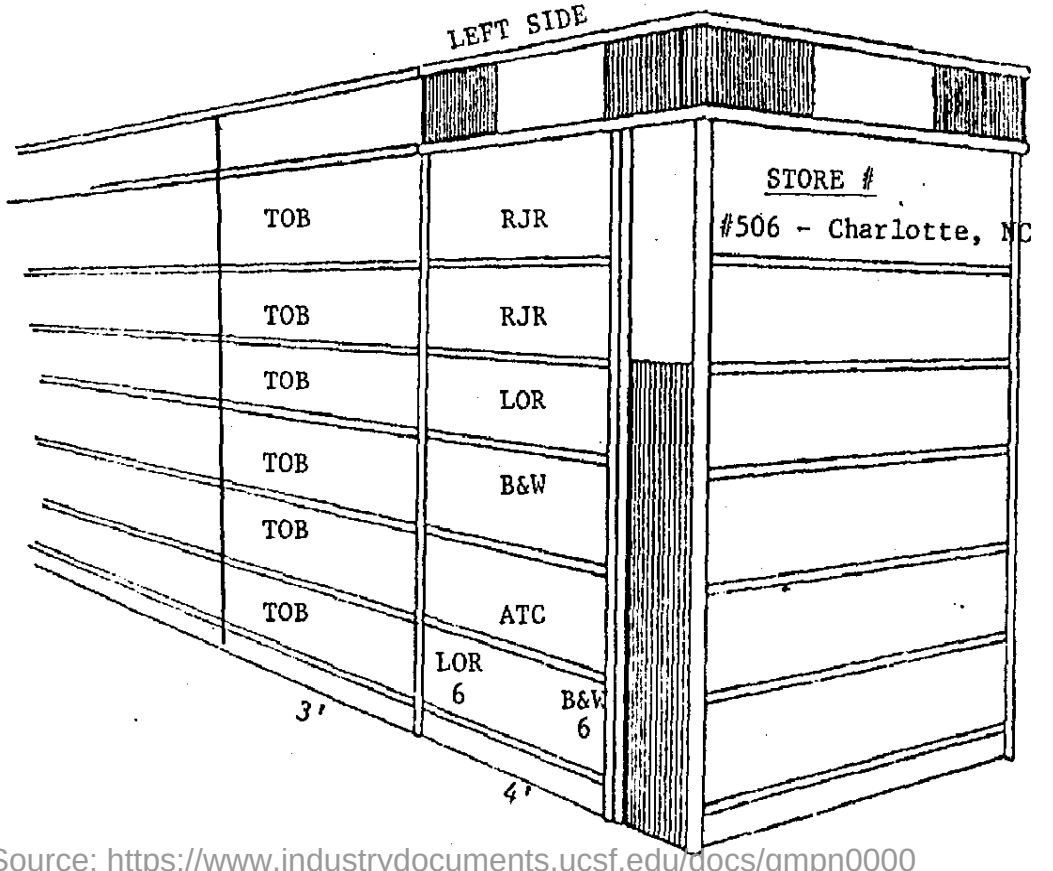

CO.	ROWS	$/MO
RJR	78	$234.
DORAL	18	40.
LOR	30	126.
B&W	30	93.
ATC	35	97.
PM	55	89.
CAMB.	9	27.
L&M	10	20.
		726.00

51851 7330

Source: https://www.industrydocuments.ucsf.edu/docs/gmpn0000

A & P STORES 4' x 7½' PLAN 10

RJR FLEX system

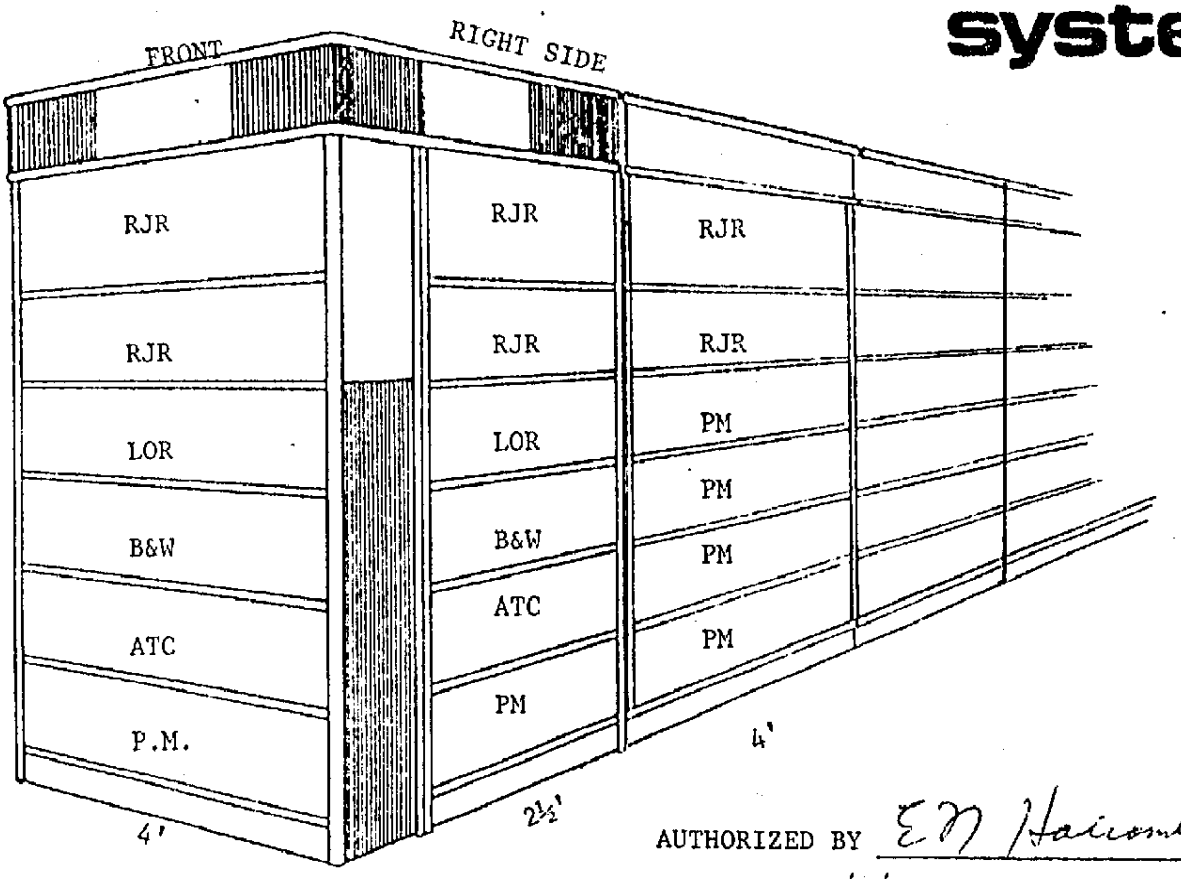

AUTHORIZED BY EM Haicombe

DATE 6/1/87

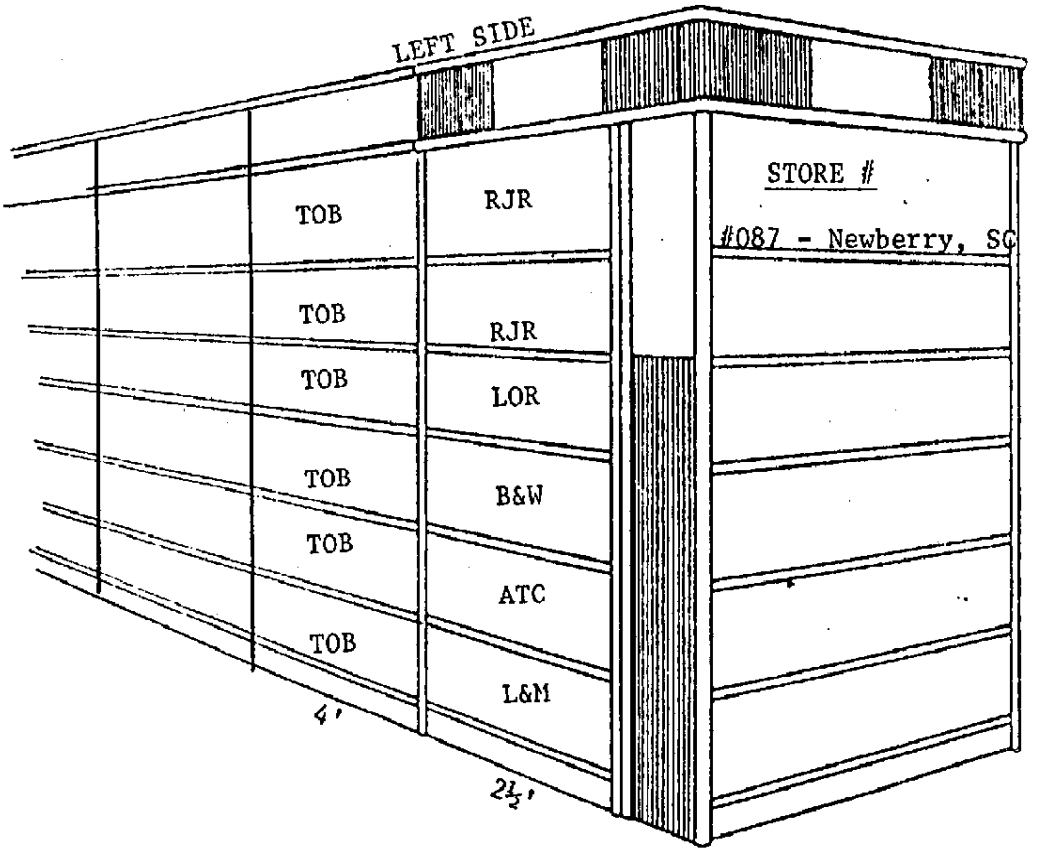

CO.	ROWS	$/MO
RJR	84	252.
LOR	28	116.
B&W	28	89.
ATC	29	79.
PM	73	161.
L&M	8	16.
		$713.

51851 7331

Source: https://www.industrydocuments.ucsf.edu/docs/gmpn0000

A & P STORES 4 x 7½' PLAN 11

RJR FLEX system

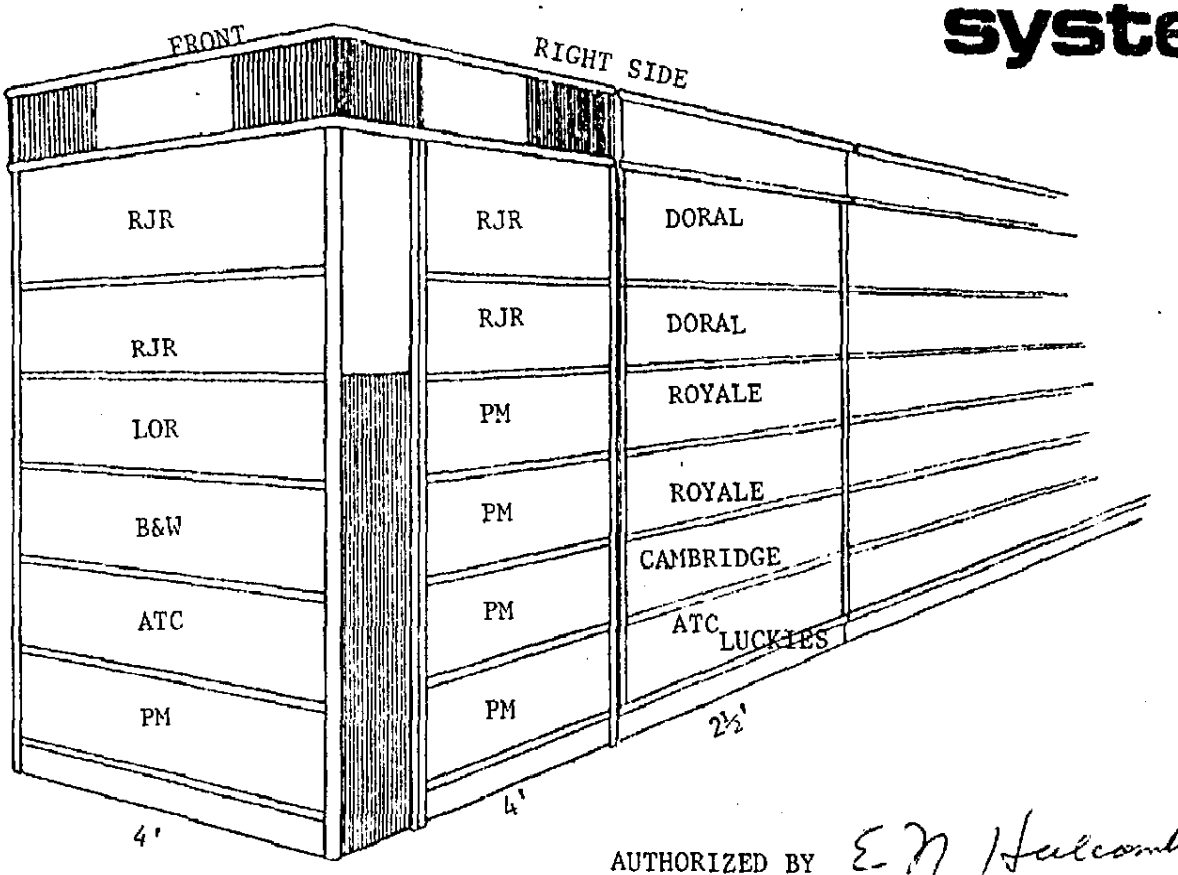

AUTHORIZED BY E M Holcombe

DATE 6/1/87

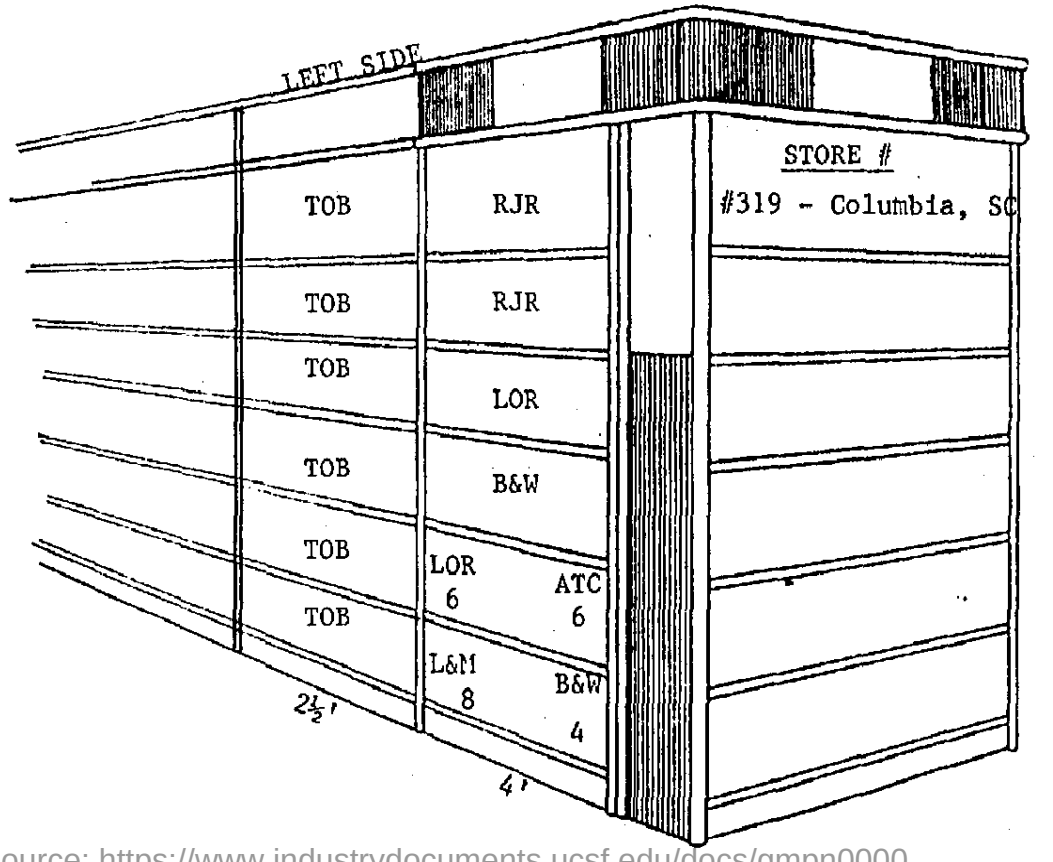

CO.	ROWS	$/MO
RJR	78	234.
DORAL	16	40.
LOR	30	126.
B&W	28	89.
ATC	27	73.
PM	65	129.
CAMB.	8	24.
L&M	8	16.
		$731.00

51851 7332

Source: https://www.industrydocuments.ucsf.edu/docs/gmpn0000

A & P STORES 4' x 7' w/4' Wrap PLAN 12

RJR FLEX system

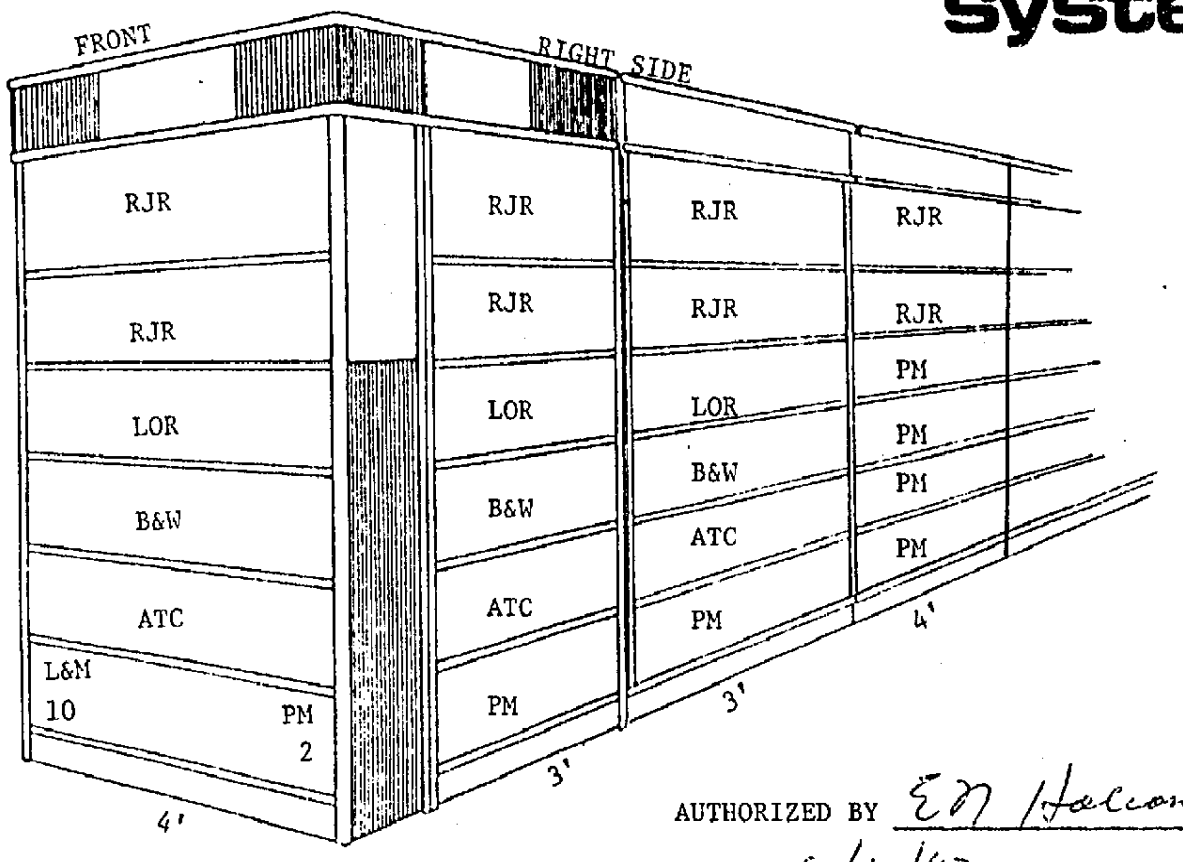

AUTHORIZED BY E M Holcombe

DATE 6/1/87

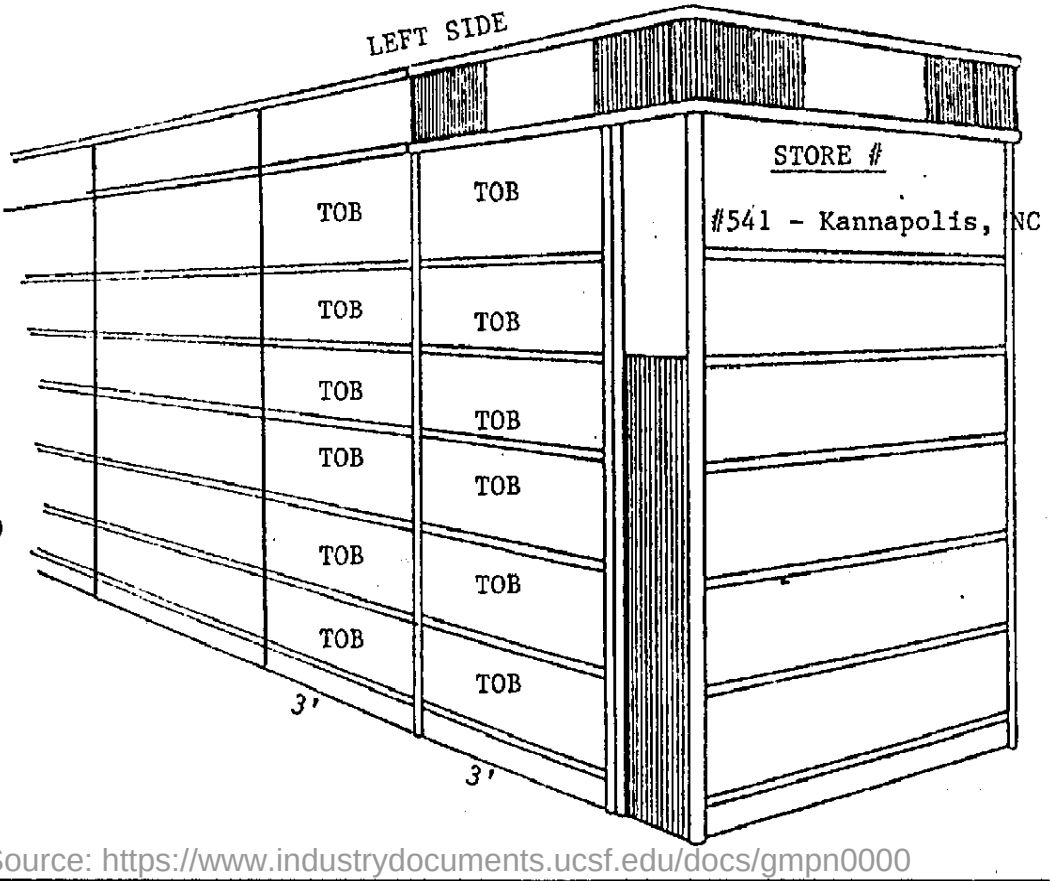

CO.	ROWS	$/MO.
RJR	88	$264.
LOR	30	126.
B&W	30	93.
ATC	31	85.
PM	72	157.
L&M	10	20.
		$745.00

51851 7333

Source: https://www.industrydocuments.ucsf.edu/docs/gmpn0000

A & P 4' x 7' PLAN 13

RJR FLEX system

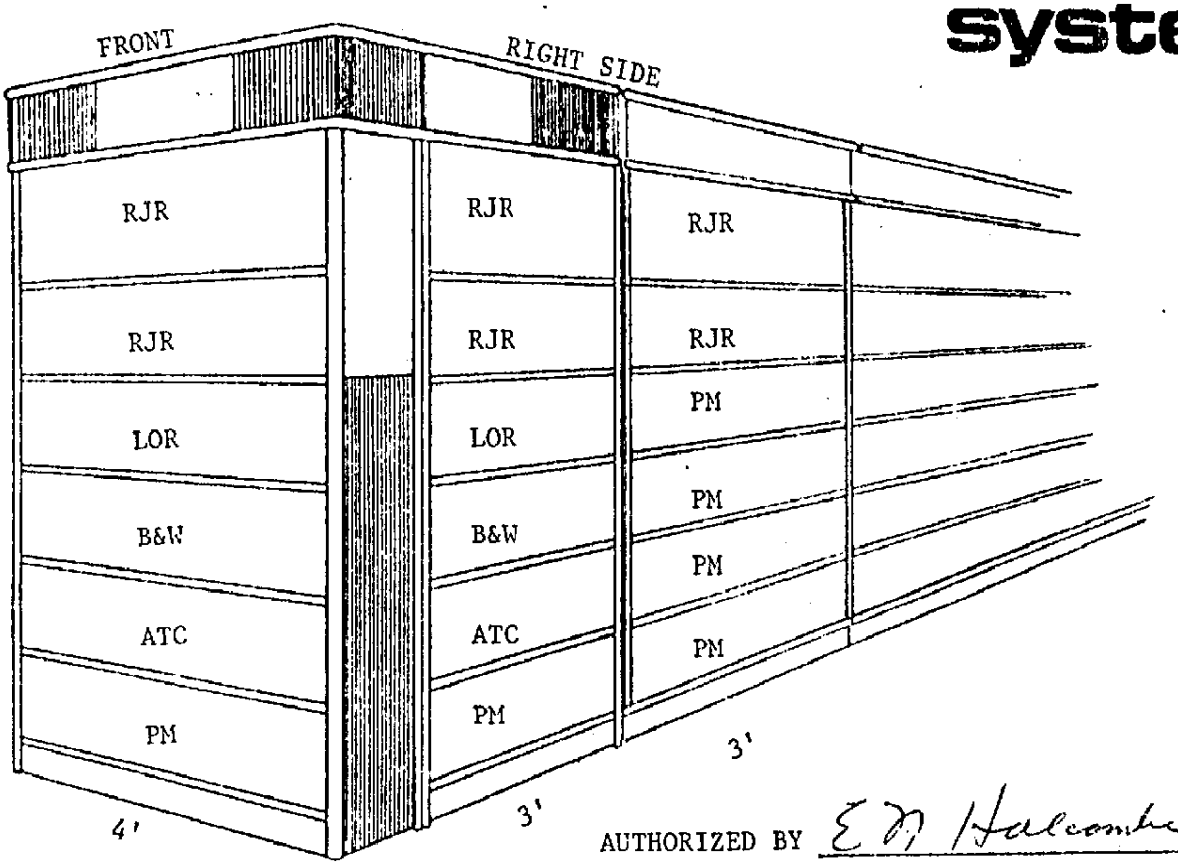

AUTHORIZED BY E M Halcombe

DATE 6/1/87

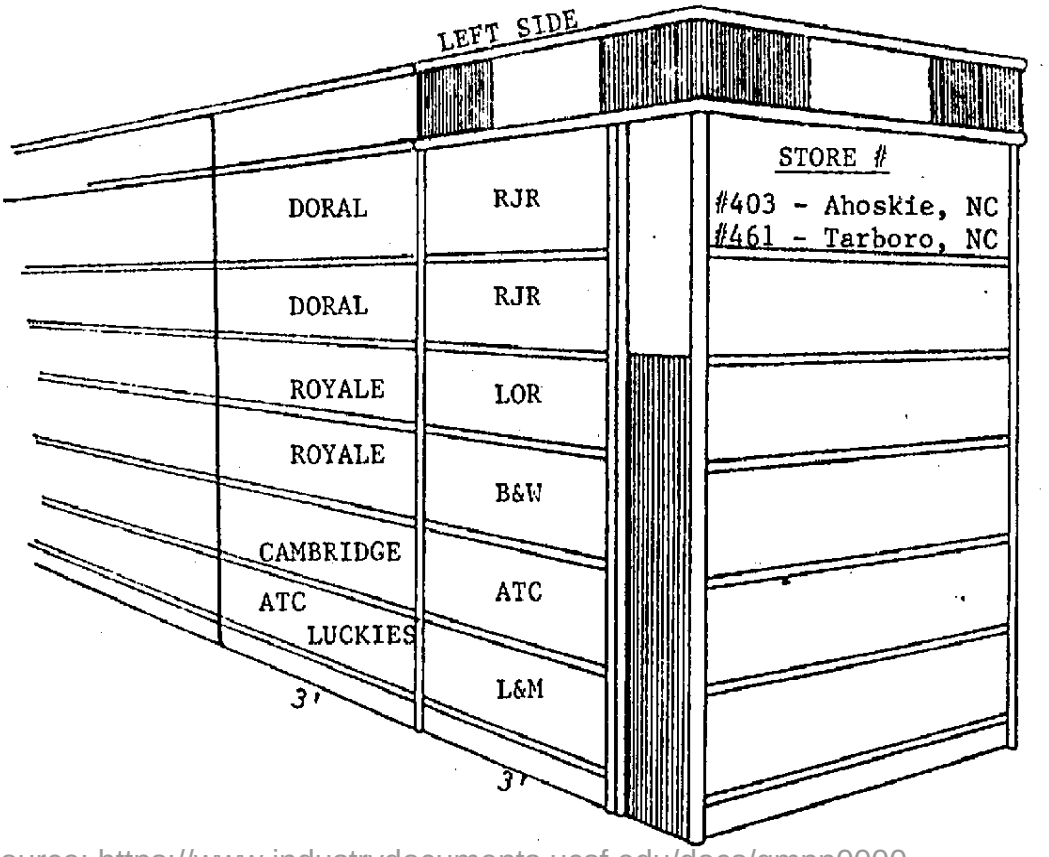

CO.	ROWS	$/MO
RJR	80	$240.
DORAL	18	40.
LOR	30	126.
B&W	30	93.
PM	58	101.
CAMB.	9	27.
ATC	40	112.
		$739.

51851 7334

Source: https://www.industrydocuments.ucsf.edu/docs/gmpn0000

A & P STORES 4' x 6' PLAN 14
2½' Generic

RJR FLEX system

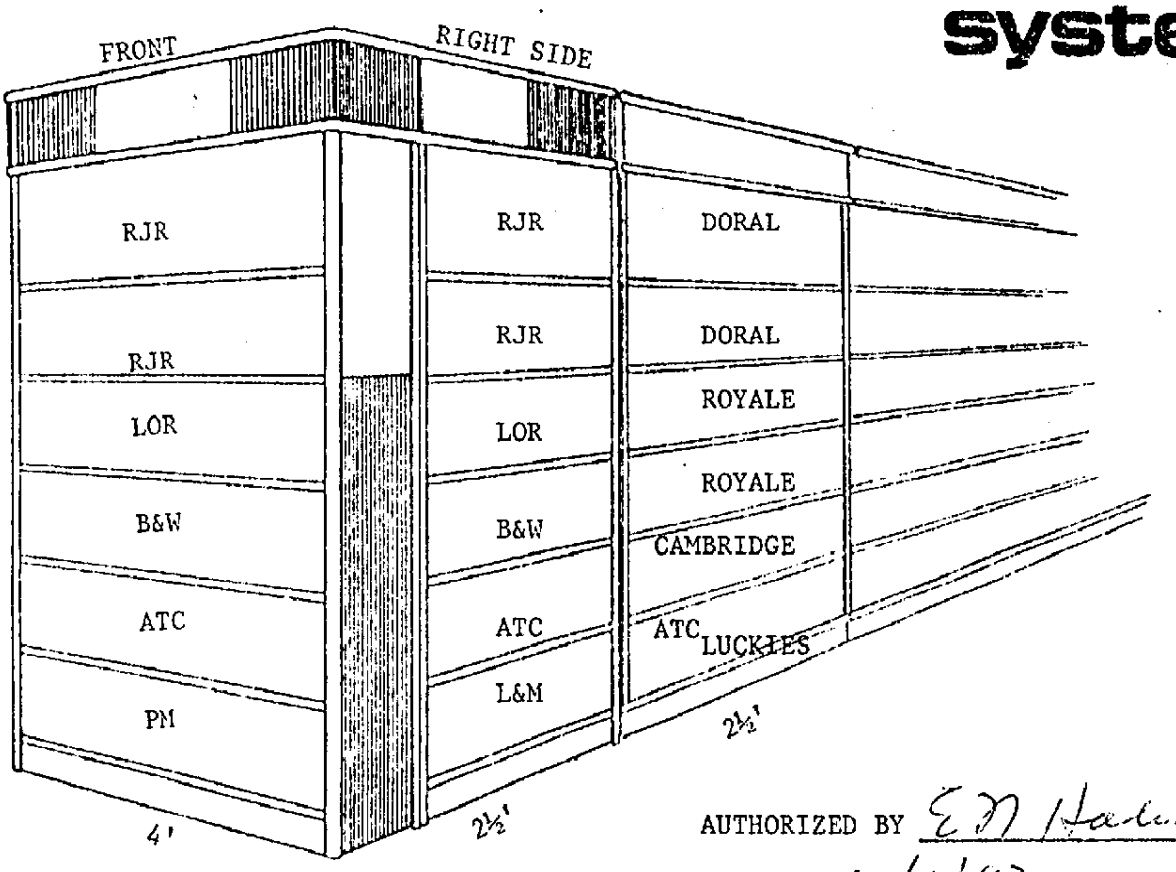

AUTHORIZED BY E M Hadcombe

DATE 6/1/87

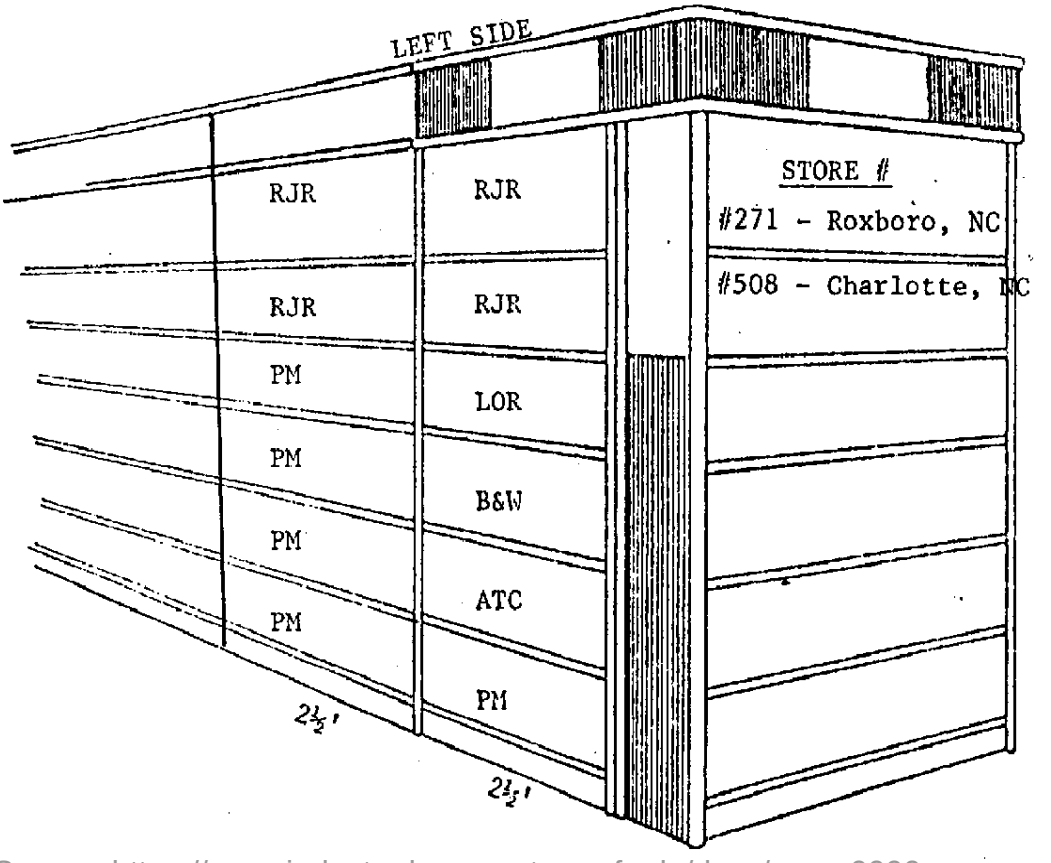

CO.	ROWS	$/MO
RJR	74	$222.
DORAL	16	40.
LOR	28	116.
B&W	29	89.
ATC	37	103.
PM	53	81.
CAMB.	8	24.
L&M	8	16.
		$691.

51851 7335

Source: https://www.industrydocuments.ucsf.edu/docs/gmpn0000

RJR FLEX system

A & P STORES 5' x 6' PLAN 15
(All double depth)

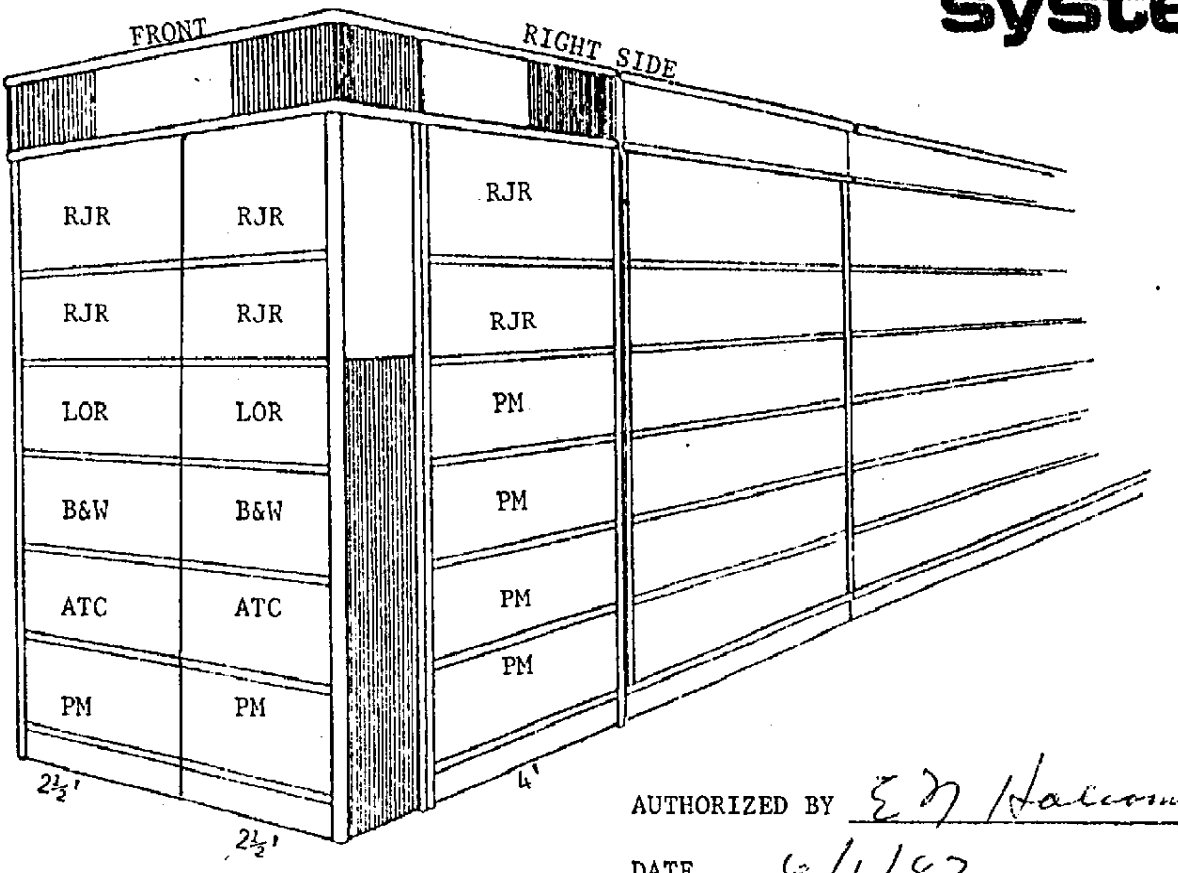

AUTHORIZED BY E M Hallcombe

DATE 6/1/87

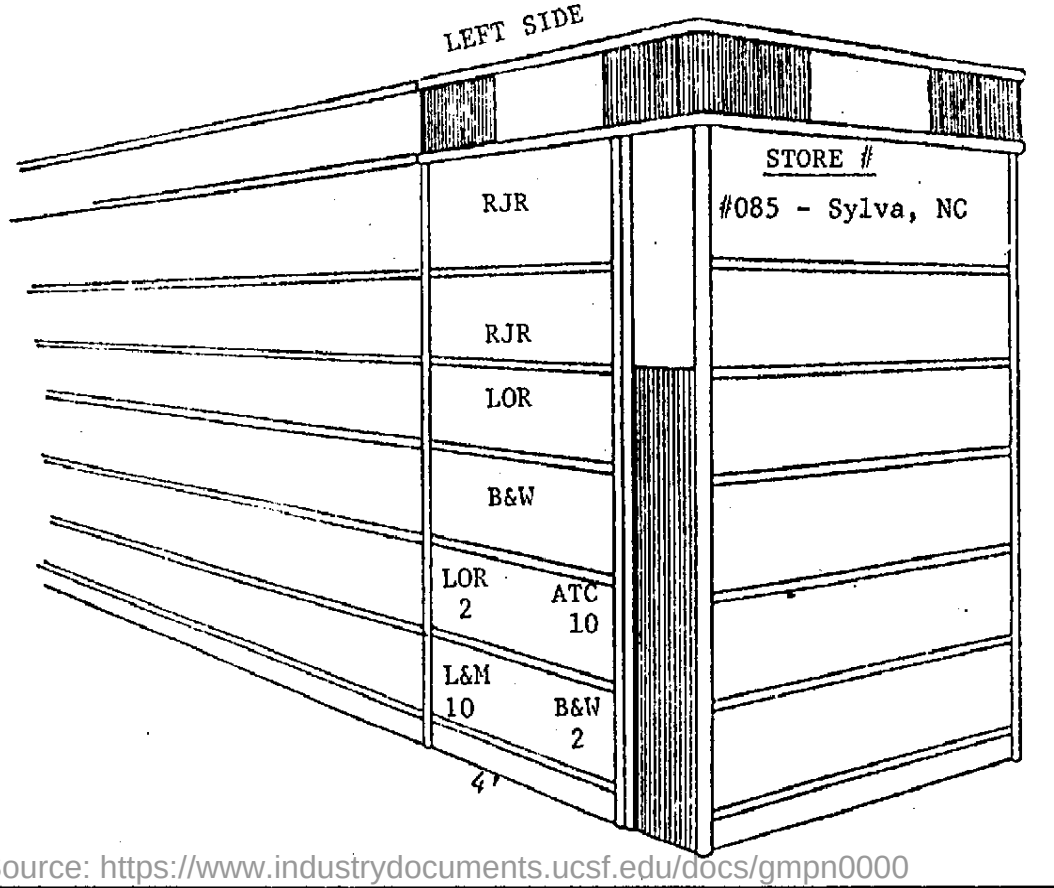

CO.	ROWS	$/MO.
RJR	84	252.
LOR	30	114.
B&W	30	93.
ATC	26	80.
PM	68	141.
L&M	10	20.
		$700.

51851 7336

Source: https://www.industrydocuments.ucsf.edu/docs/gmpn0000

A & P STORES

5' x 4' w/4' Wrap
(5-shelf wrap)

PLAN 16

RJR FLEX system

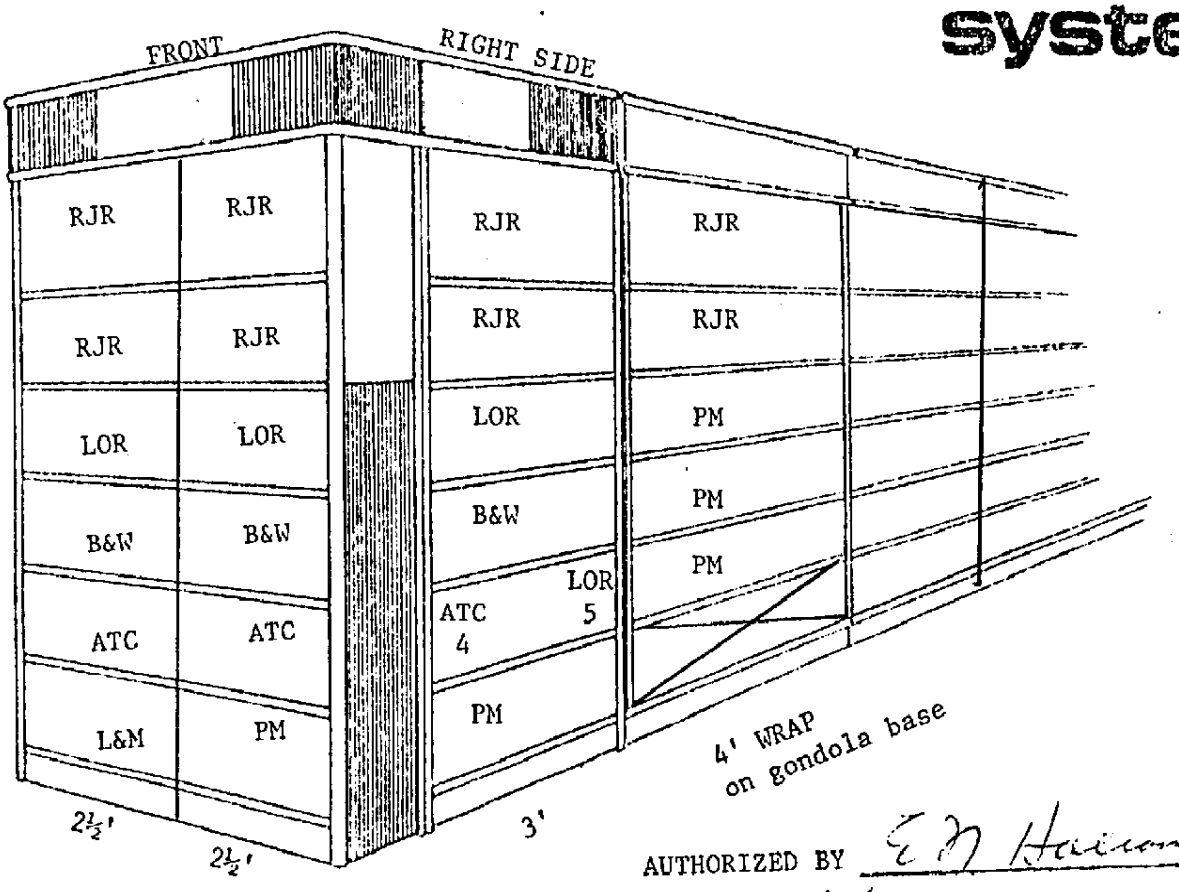

AUTHORIZED BY E M Hallander

DATE 6/1/87

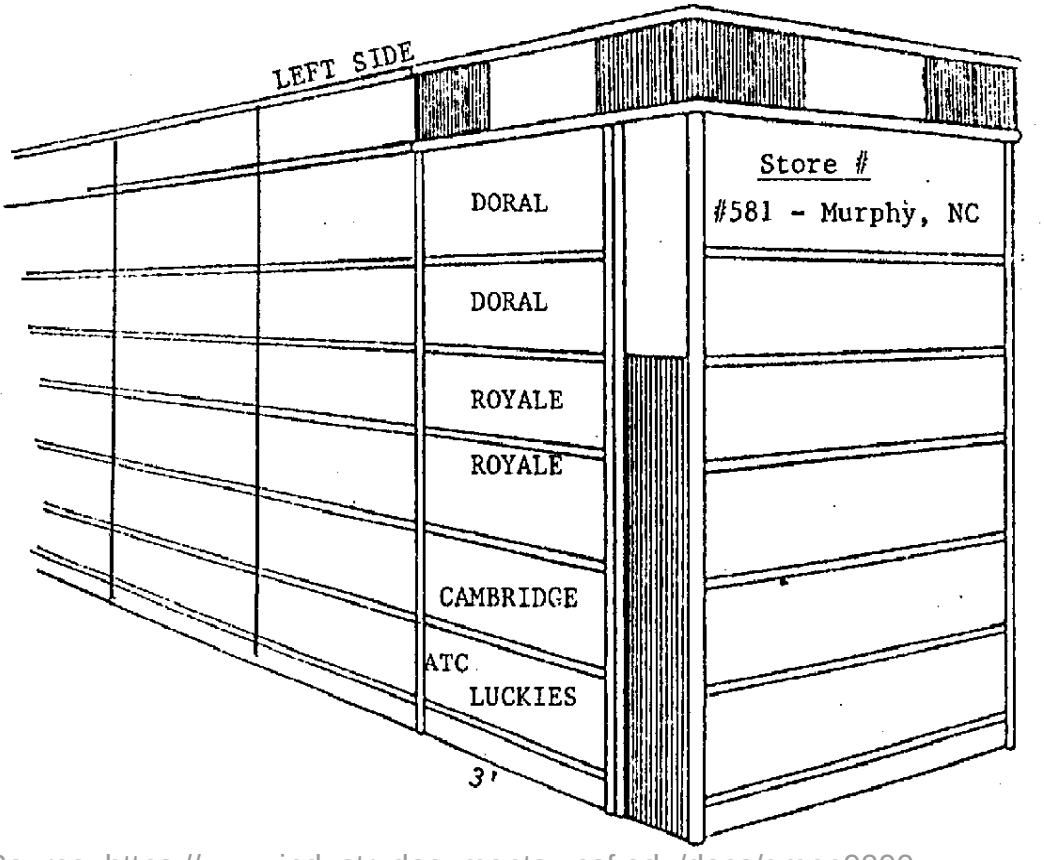

CO.	ROWS	$/MO
RJR	76	$228
DORAL	18	40
LOR	30	114
B&W	25	81
ATC	29	79
PM	56	93
CAMB.	9	27
L&M	8	16
		$678.

51851 7337

Source: https://www.industrydocuments.ucsf.edu/docs/gmpn0000

A & P STORES PLAN 17

5' x 4'

RJR FLEX system

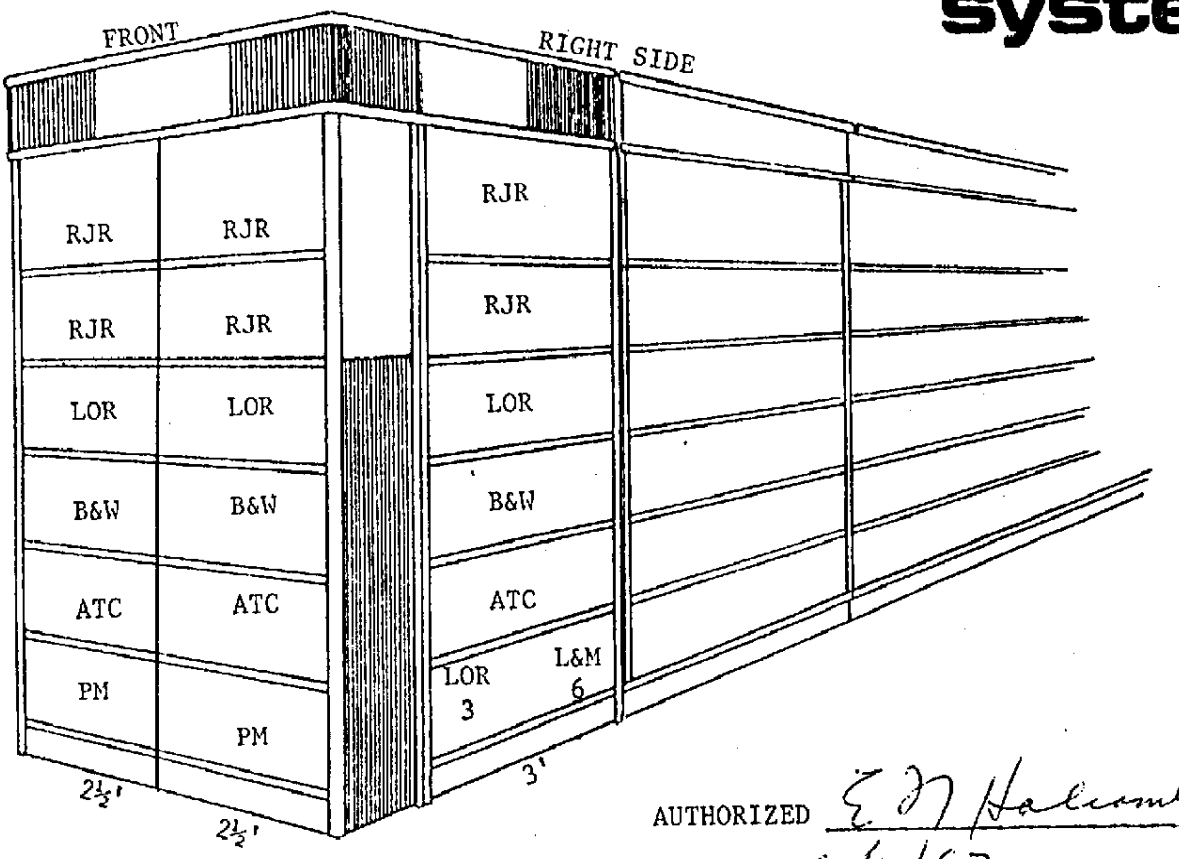

AUTHORIZED E M Halcombe

DATE 6/1/87

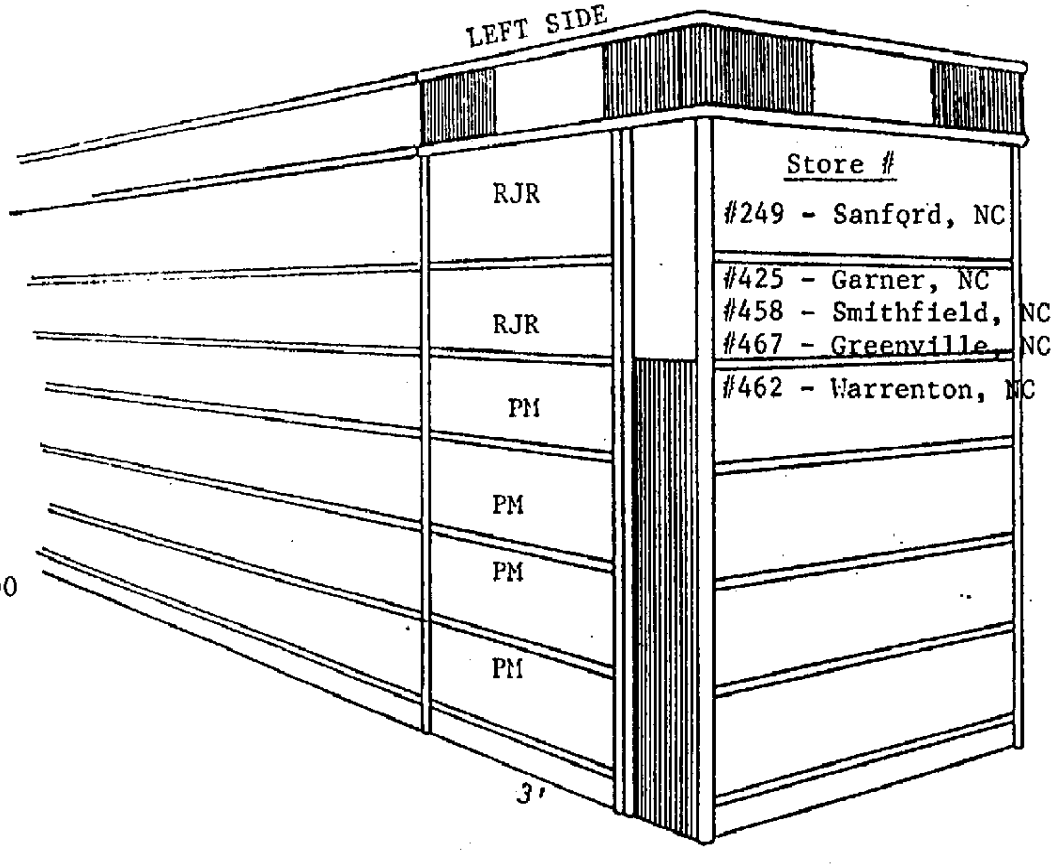

Store #

#249 - Sanford, NC

#425 - Garner, NC
#458 - Smithfield, NC
#467 - Greenville, NC

#462 - Warrenton, NC

CO.	ROWS	$/MO.
RJR	68	$204.
LOR	28	104.
B&W	25	81.
ATC	25	67.
PM	52	77.
L&M	6	9.
		$542.00

51851 7338

Source: https://www.industrydocuments.ucsf.edu/docs/gmpn0000

A & P STORES 5' x 3½' PLAN 18

RJR FLEX system

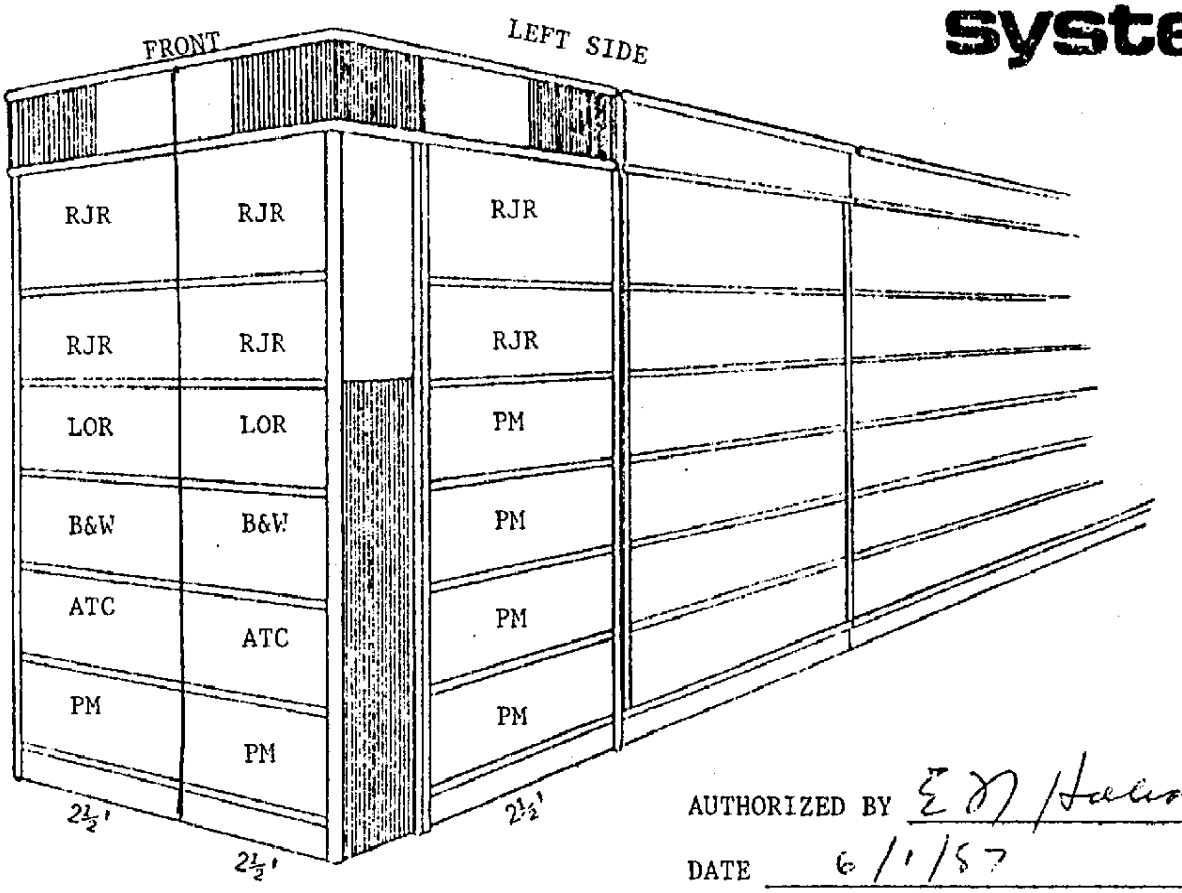

AUTHORIZED BY E M Hollingsworth

DATE 6/1/67

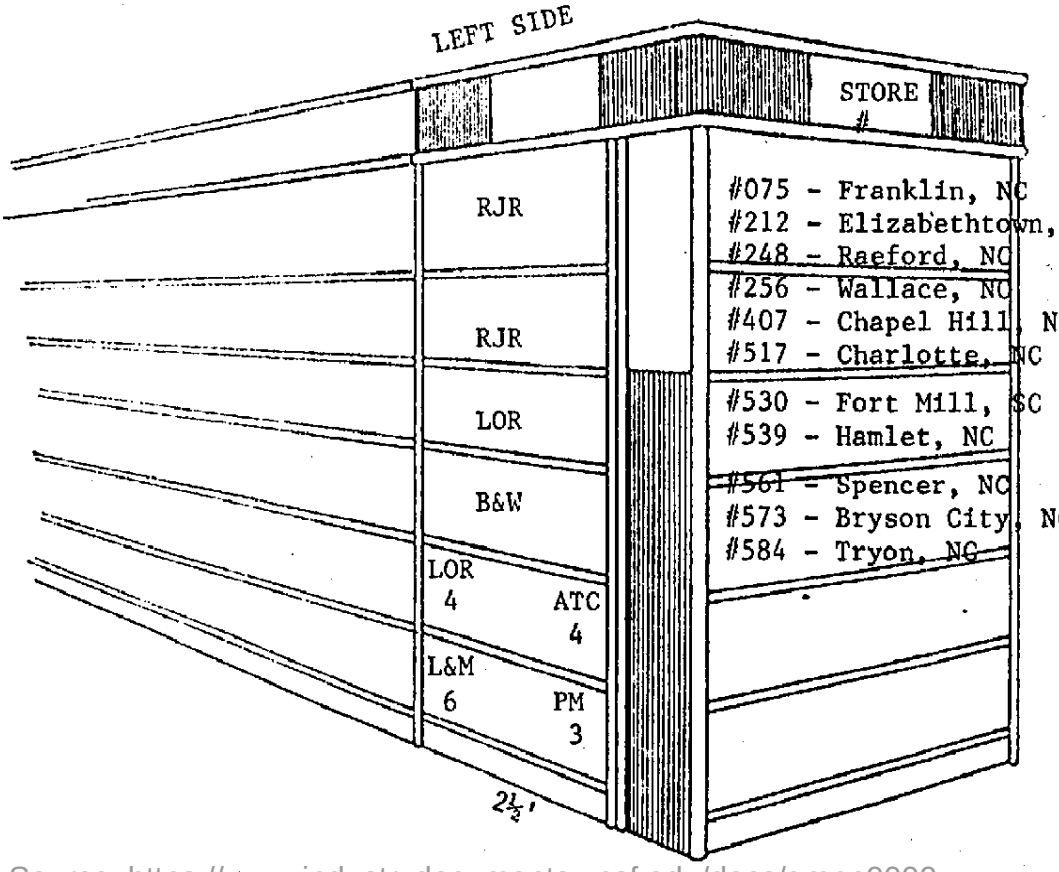

CO.	ROWS	$/MO.
RJR	64	$192.
LOR	28	104.
B&W	24	71.
ATC	20	52.
PM	51	73.
L&M	6	9.
		$501.

51851 7339

Source: https://www.industrydocuments.ucsf.edu/docs/gmpn0000

A & P STORES 6' x 5' PLAN 19

RJR FLEX system

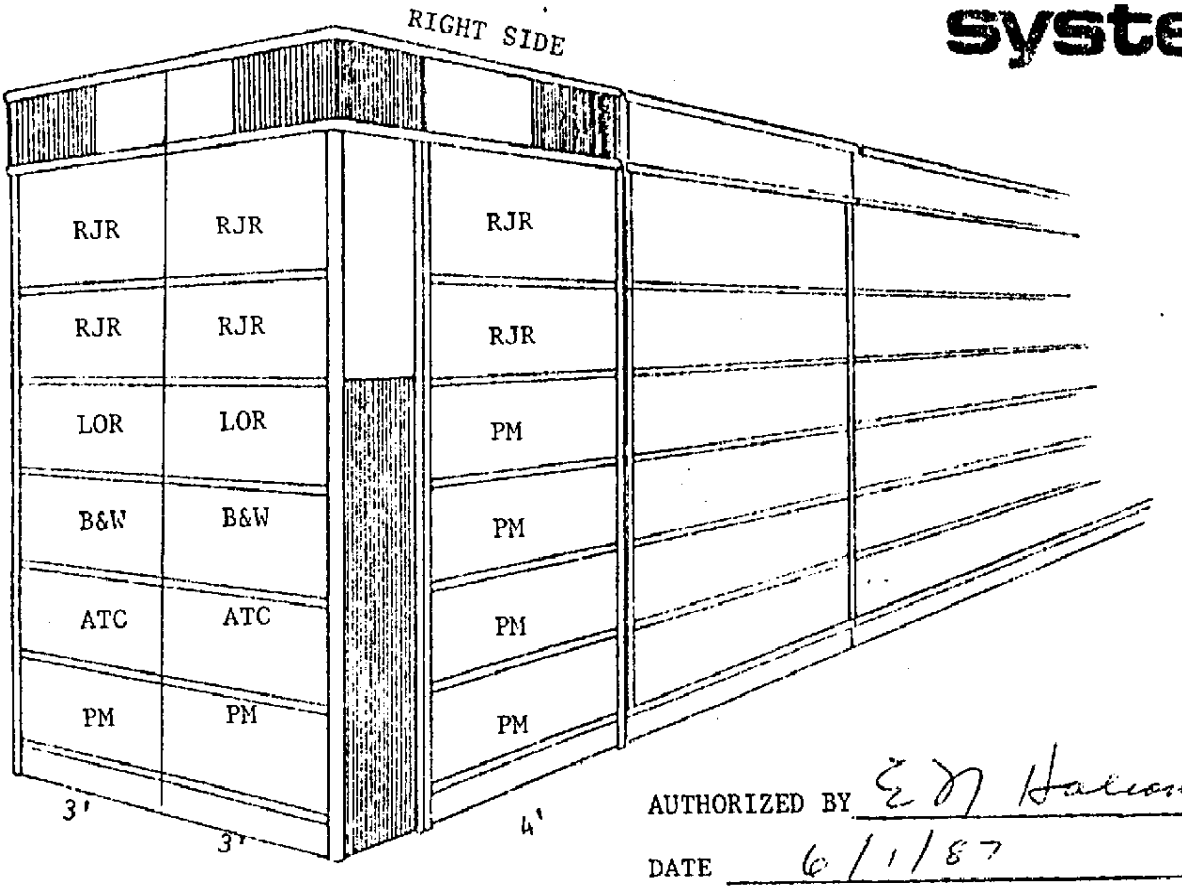

AUTHORIZED BY E M Haircombe

DATE 6/1/87

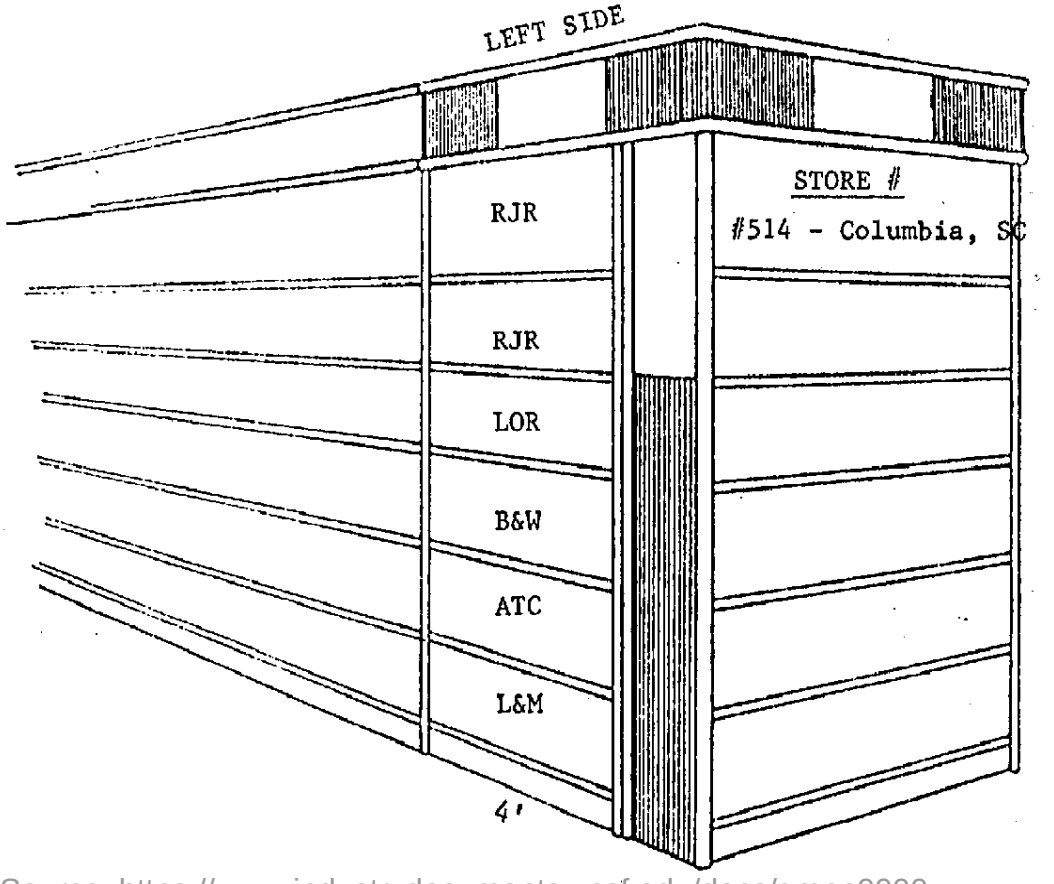

CO.	ROWS	$/MO.
RJR	88	$264.
LOR	30	114.
B&W	30	93.
ATC	31	85.
PM	70	149.
L&M	12	20.
		$725.

51851 7340

Source: https://www.industrydocuments.ucsf.edu/docs/gmpn0000

RJR FLEX system

A & P STORES 6' x 4' PLAN 20

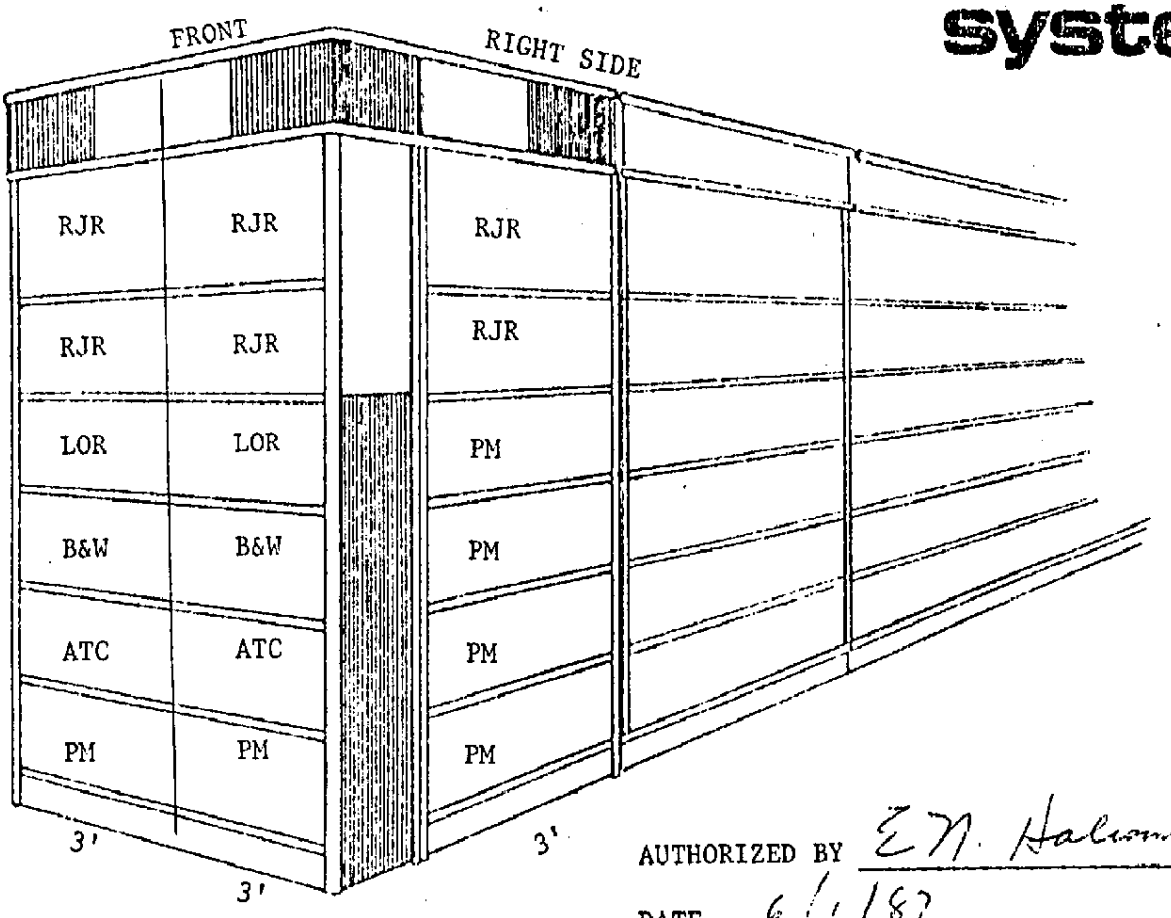

AUTHORIZED BY E.M. Halcombe

DATE 6/1/87

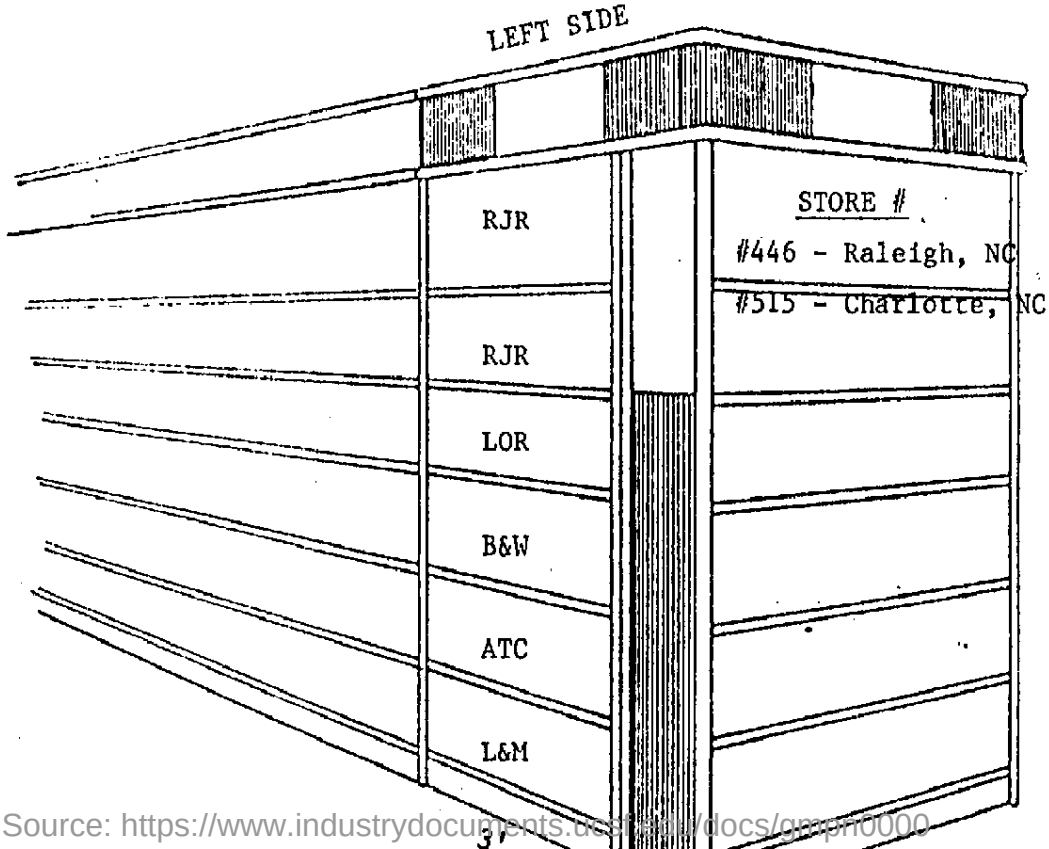

STORE #

#446 - Raleigh, NC

#515 - Charlotte, NC

CO.	ROWS	$/MO.
RJR	72	$216.
LOR	27	99.
B&W	27	86.
ATC	27	73.
PM	54	85.
L&M	9	18.
		$577.

51851 7341

Source: https://www.industrydocuments.ucsf.edu/docs/qmph0000

A & P STORES 7' x 3½' Flex Plan 21

RJR FLEX system

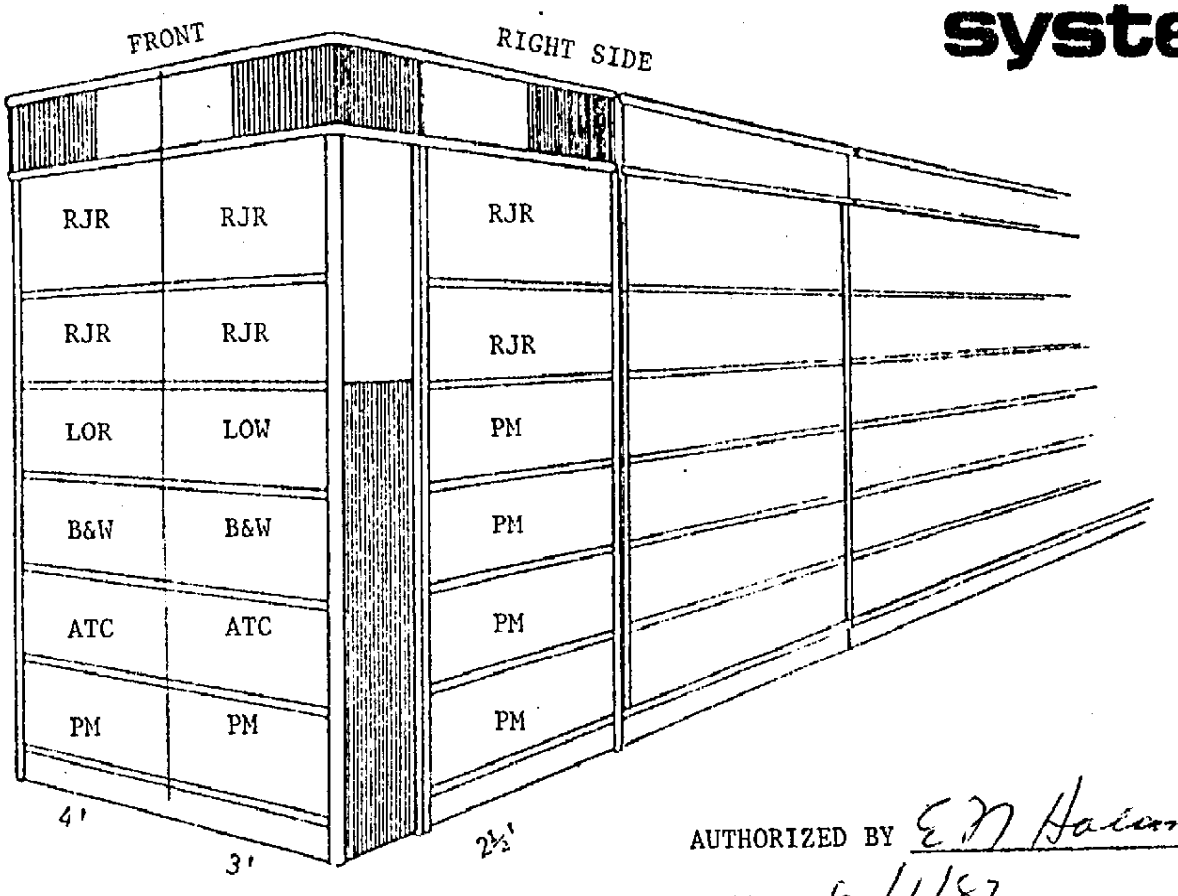

AUTHORIZED BY E M Halcombe

DATE 6/1/87

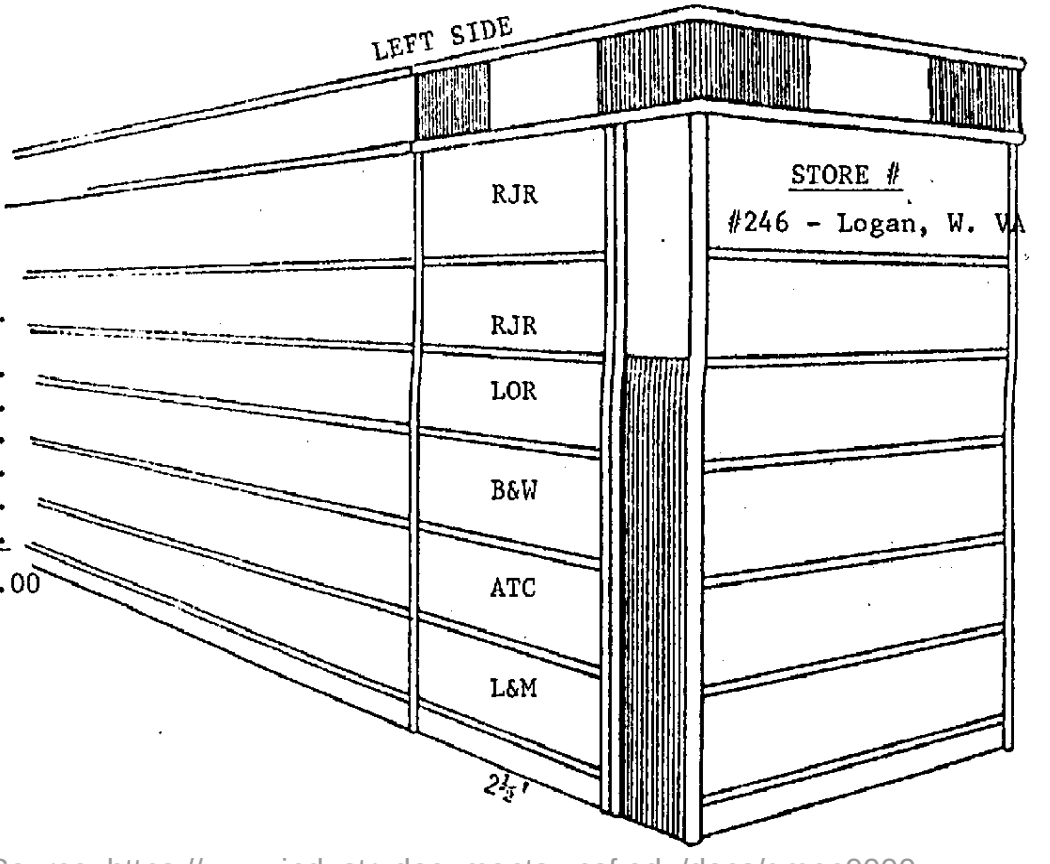

CO.	ROWS	$/MO.
RJR	76	$228.
LOR	29	109.
B&W	29	91.
ATC	29	92.
PM	54	85.
L&M	8	16.
		$621.00

51851 7342

Source: https://www.industrydocuments.ucsf.edu/docs/gmpn0000

RJR FLEX system

A & P STORES

8' x 4' w/6' Wrap PLAN 22
3' Tob.
3' Generic

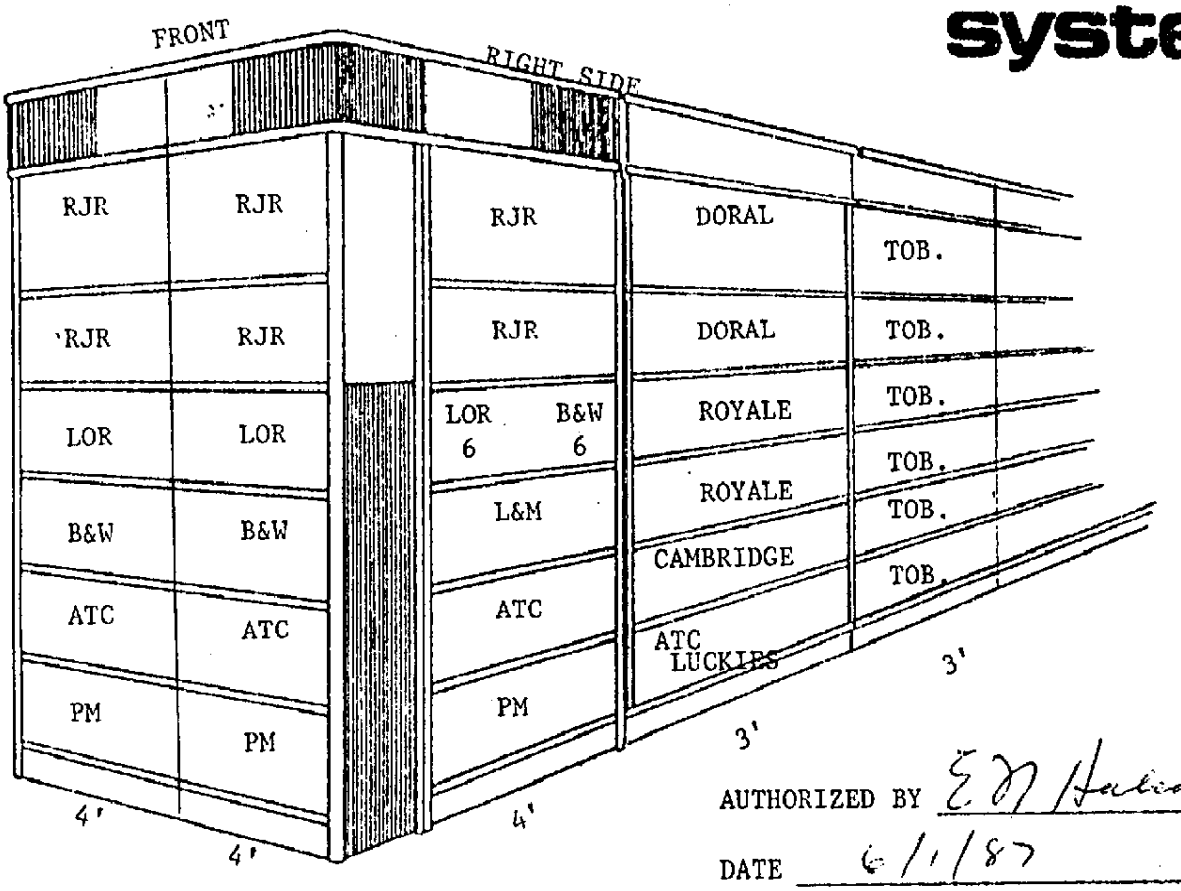

AUTHORIZED BY E M Hartcombe

DATE 6/1/87

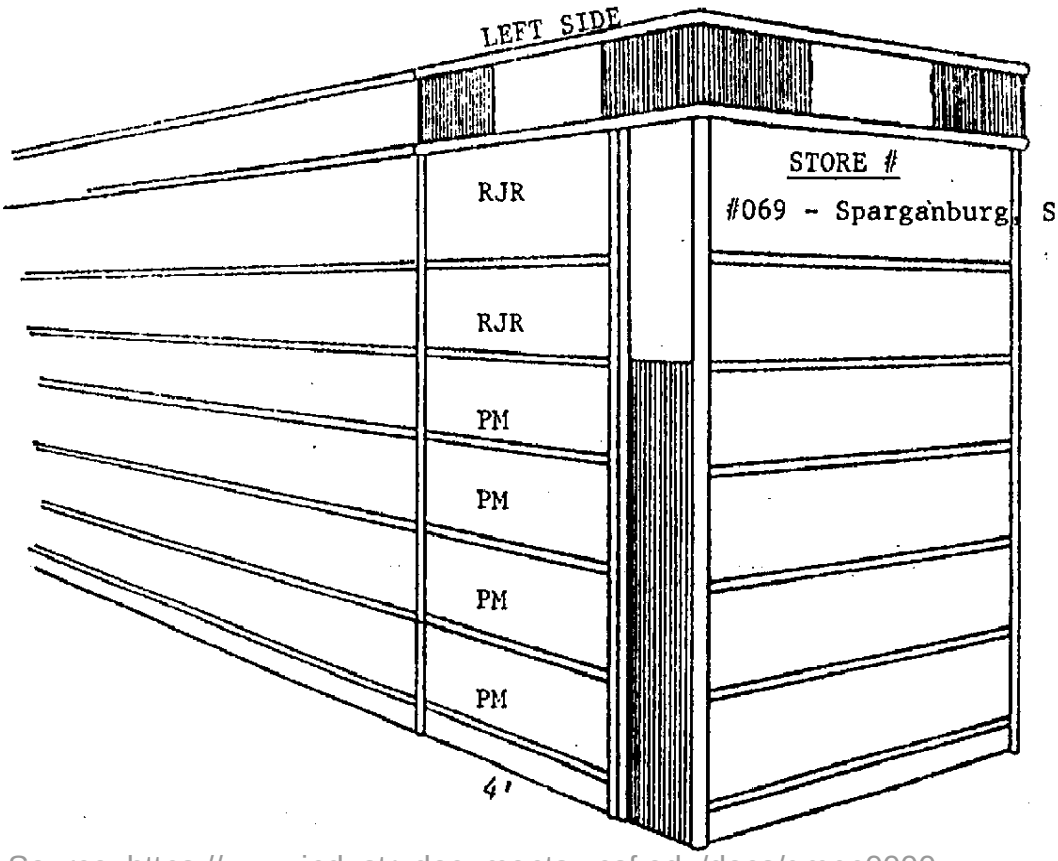

STORE #
#069 - Spartanburg, SC

CO.	ROWS	$/MO.
RJR	104	$312.
DORAL	18	40.
LOR	30	126.
B&W	30	93.
ATC	48	146.
PM	~~39~~ 91	233.
CAMB.	9	27.
L&M	12	20.
		$997.00

51851 7343

Source: https://www.industrydocuments.ucsf.edu/docs/gmpn0000

A & P STORES 4' x 9' PLAN 23

(including 2½' pkg. end cap)

RJR FLEX system

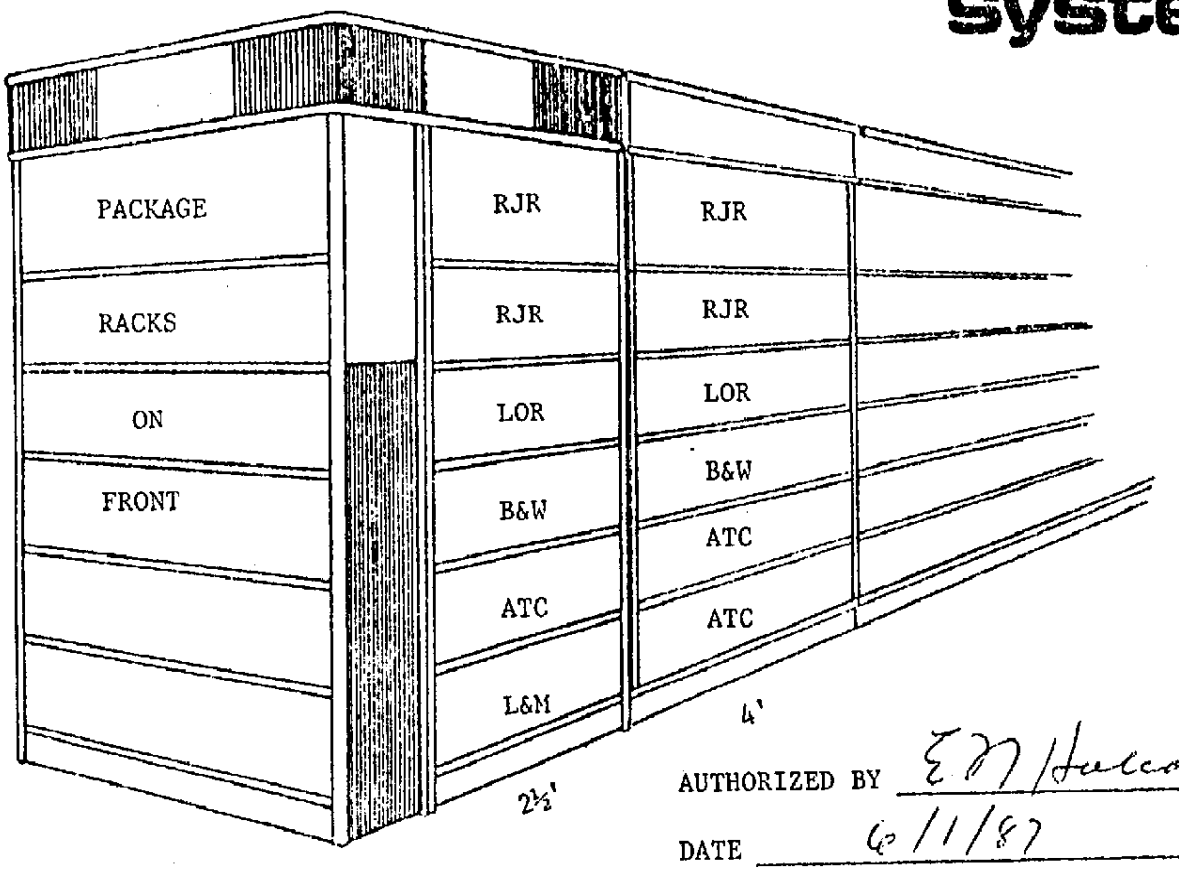

AUTHORIZED BY E M Holcombe

DATE 6/11/87

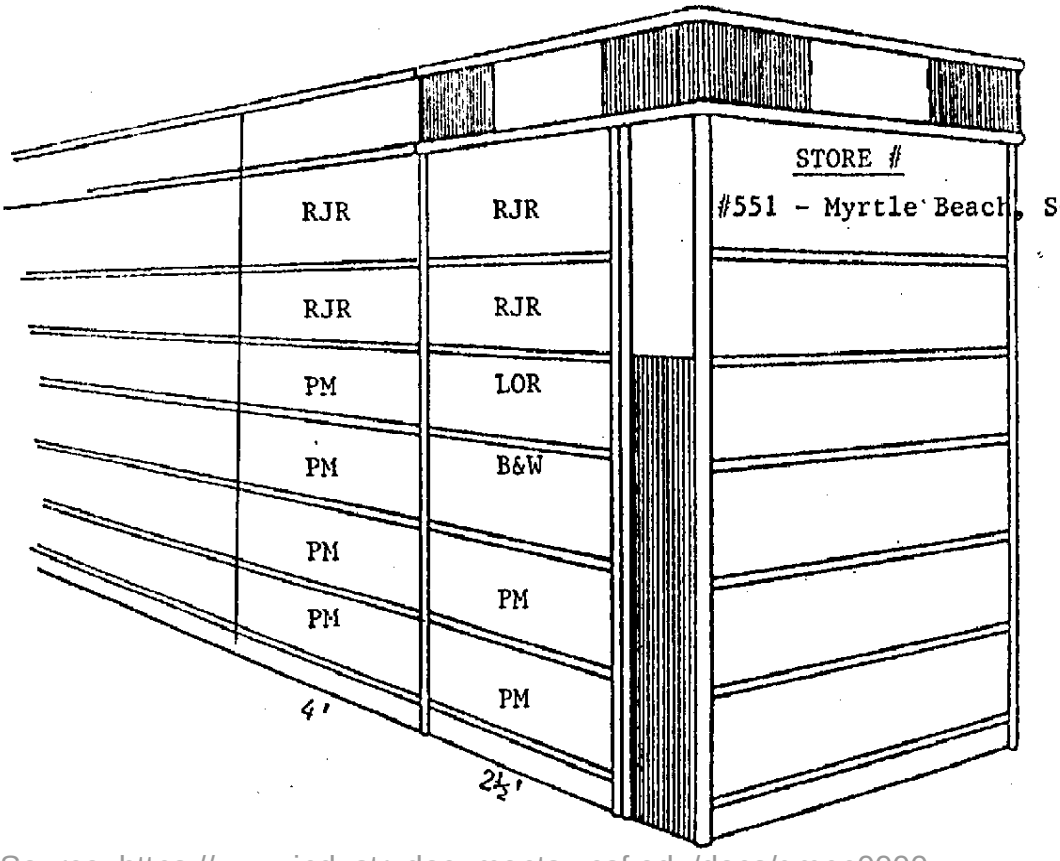

STORE #

#551 - Myrtle Beach, SC

CO.	ROWS	$/MO.
RJR	84	$252.
LOR	28	116.
B&W	28	89.
ATC	34	94.
PM	68	141.
L&M	8	16.
		708.00

51851 7344

Source: https://www.industrydocuments.ucsf.edu/docs/gmpn0000

A & P STORES 4' x 10' PLAN 24

4' Tob.
2½' Generic

RJR FLEX system

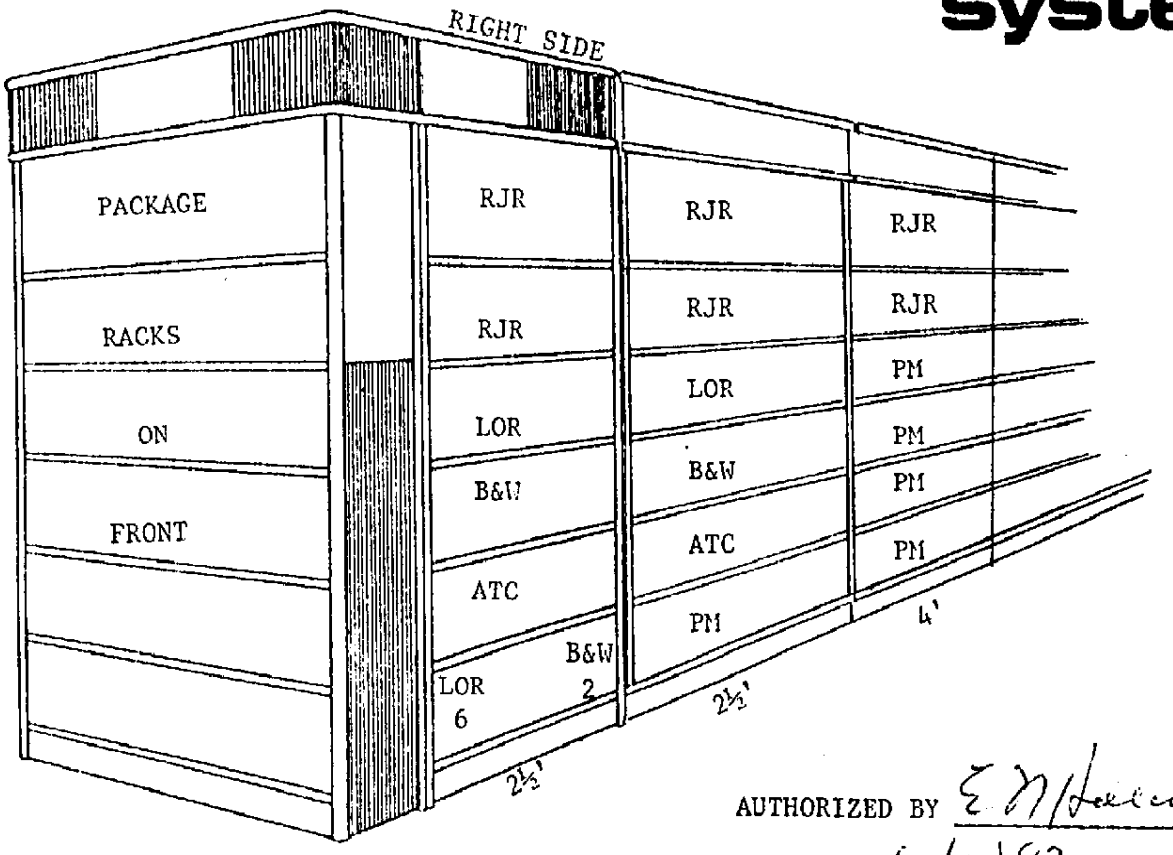

AUTHORIZED BY E M Holcombe

DATE 6/1/87

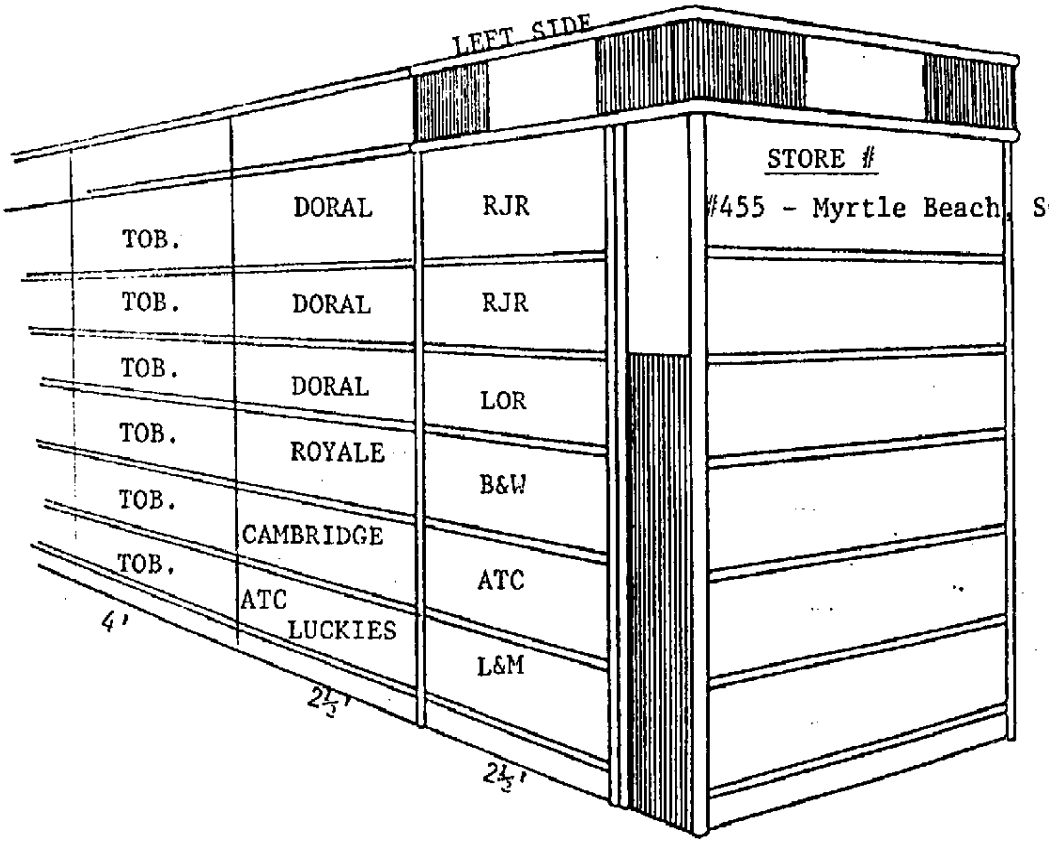

CO.	ROWS	$/MO
RJR	74	$212.
DORAL	24	40.
LOR	30	114.
B&W	28	89.
ATC	32	88.
PM	60	109.
CAMB.	8	24.
L&M	8	16.
		$692.00

51851 7345

Source: https://www.industrydocuments.ucsf.edu/docs/gmpn0000

A & P STORES 4' x 11½' PLAN 25

(includes end cap pkg. fixtures)

RJR FLEX system

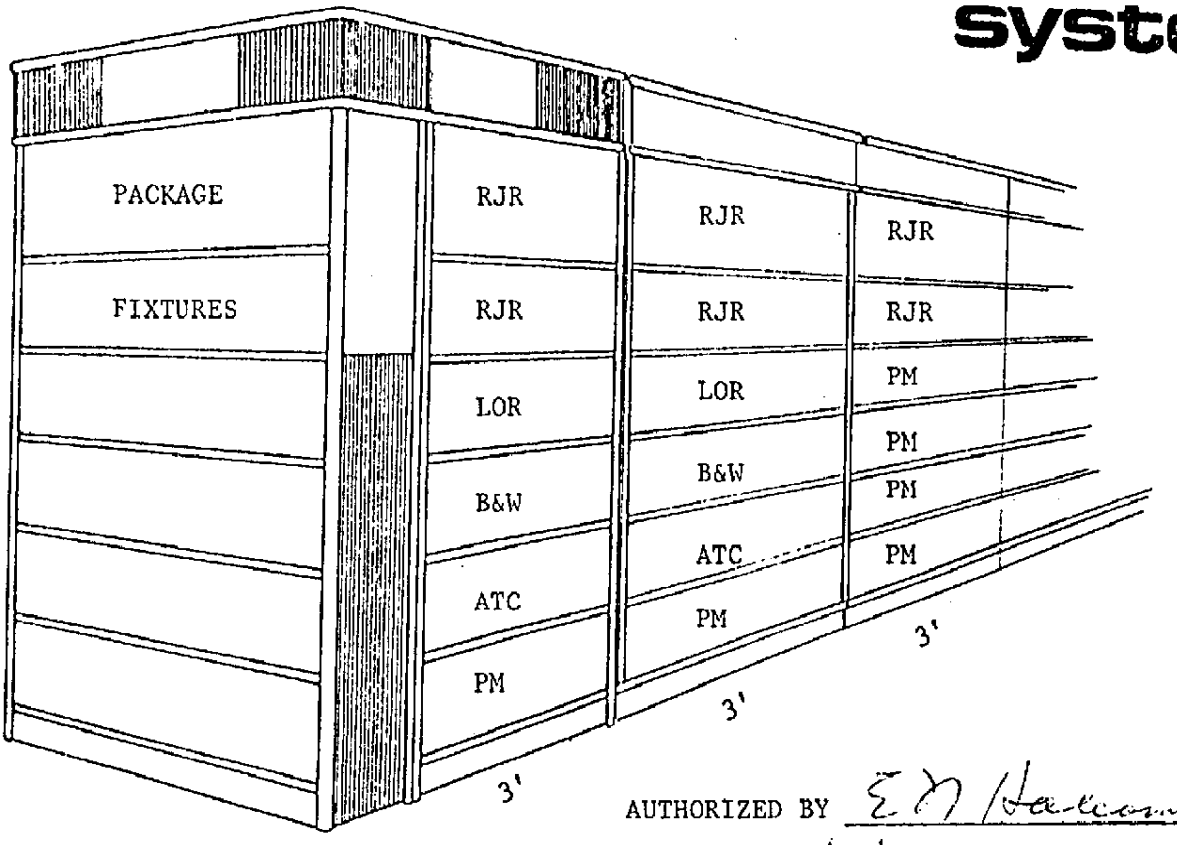

AUTHORIZED BY E N Halcombe

DATE 6/1/87

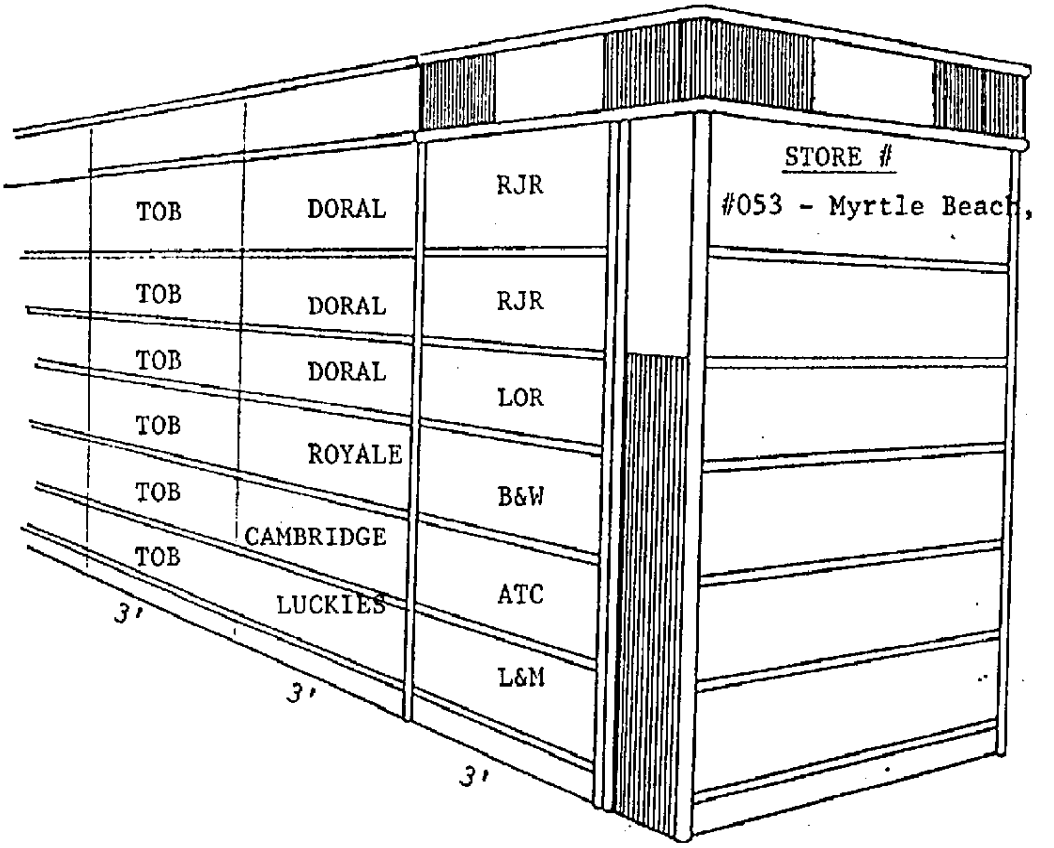

CO.	ROWS	$/MO.
RJR	72	$216.
DORAL	27	40.
LOR.	27	99.
B&W	27	86.
ATC	36	100.
PM	54	85.
CAMB.	9	27.
L&M	9	18.
		$671.

51851 7346

Source: https://www.industrydocuments.ucsf.edu/docs/gmpn0000

A & P STORES 4' x 14½' PLAN 26

RJR FLEX system

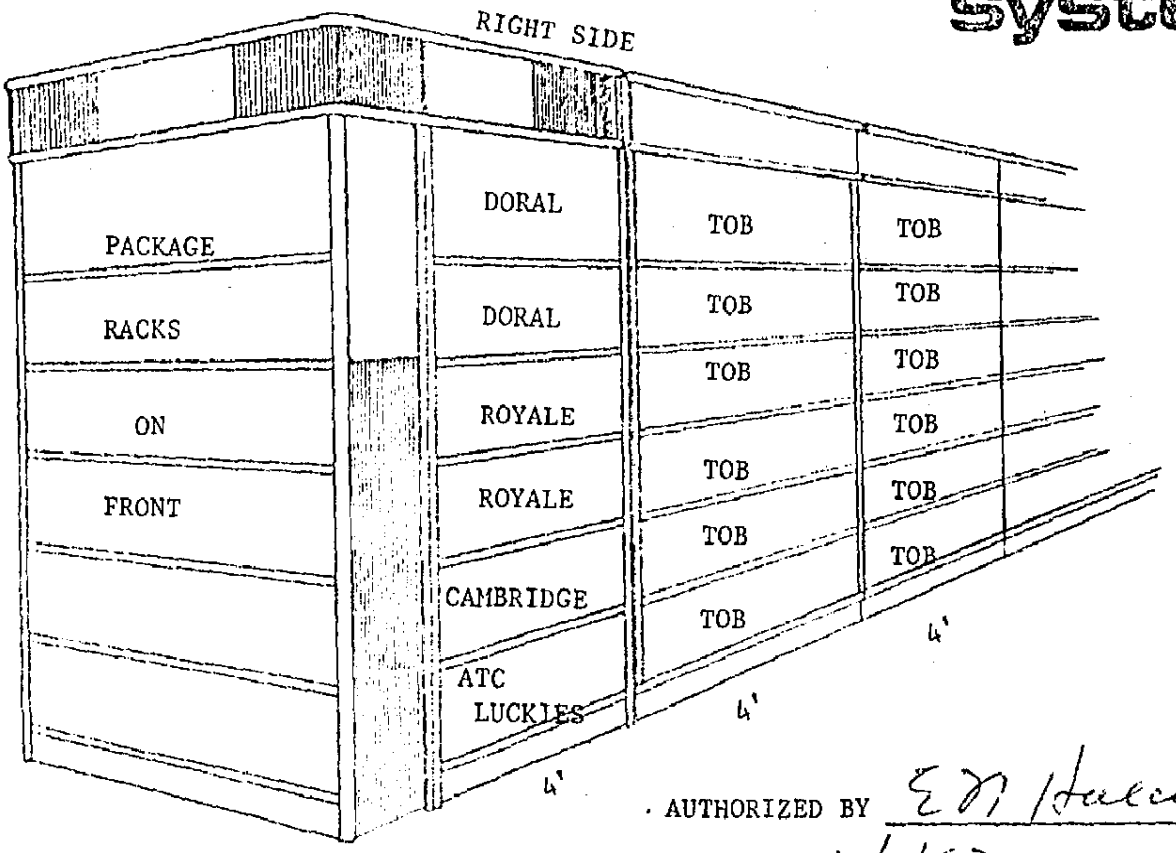

AUTHORIZED BY E M Holcombe

DATE 6/1/87

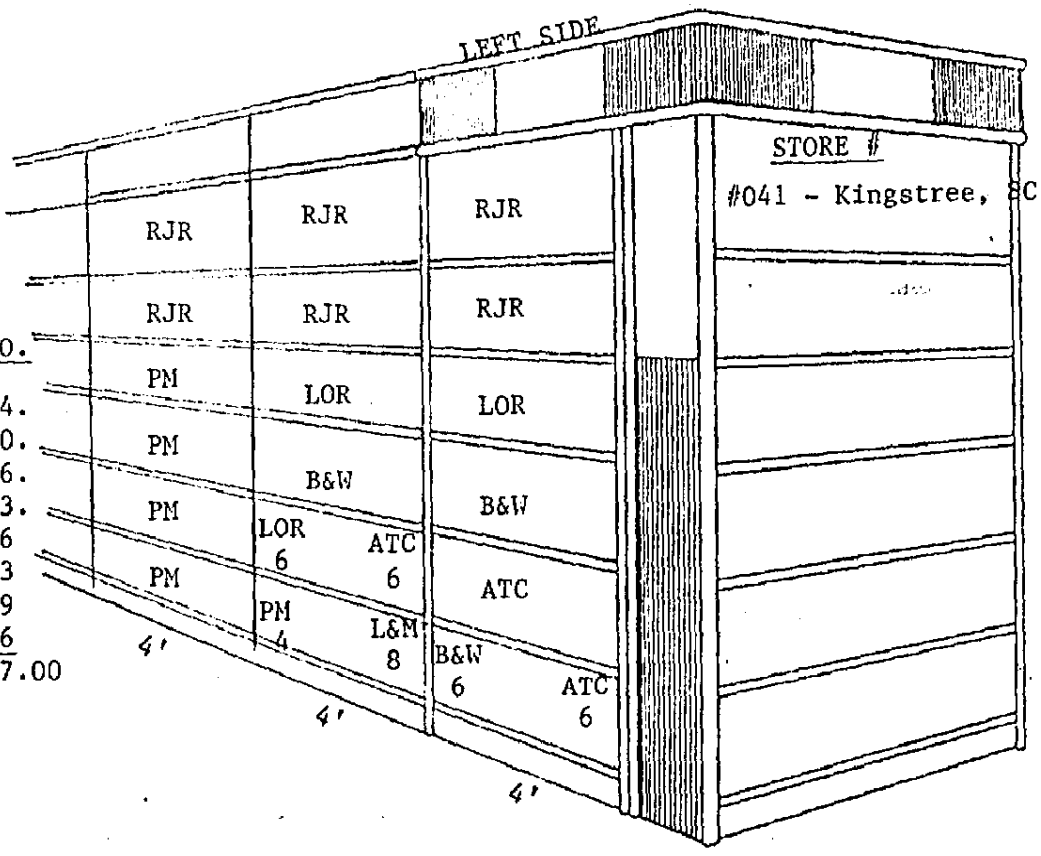

CO.	ROWS	$/MO.
RJR	78	$234.
DORAL	26	40.
LOR	30	126.
B&W	30	93.
ATC	38	106
PM	56	93
CAMB.	13	39
L&M	8	16
		$747.00

51851 7347

Source: https://www.industrydocuments.ucsf.edu/docs/gmpn0000

51851 7348

RJR

A & P STORES
FAMILY MARTS

Modular Carton Merchandising System
Plan-O-Gram

1' x 20'

PLAN 27

STORE #
#901 - Greenville, SC
#902 - Greenville, SC

RJR	RJR	RJR	RJR	RJR DORAL
RJR	RJR	RJR	RJR	RJR DORAL
LOR	LOR	LOR 6 / PM 6	PM	ROYALE
ATC	ATC	ATC 6 / PM 6	PM	ROYALE
B&W	B&W	B&W / PM	PM	CAMBRIDGE
L&M	PM	PM	PM	LUCKIES
4'	4'	4'	4'	4'

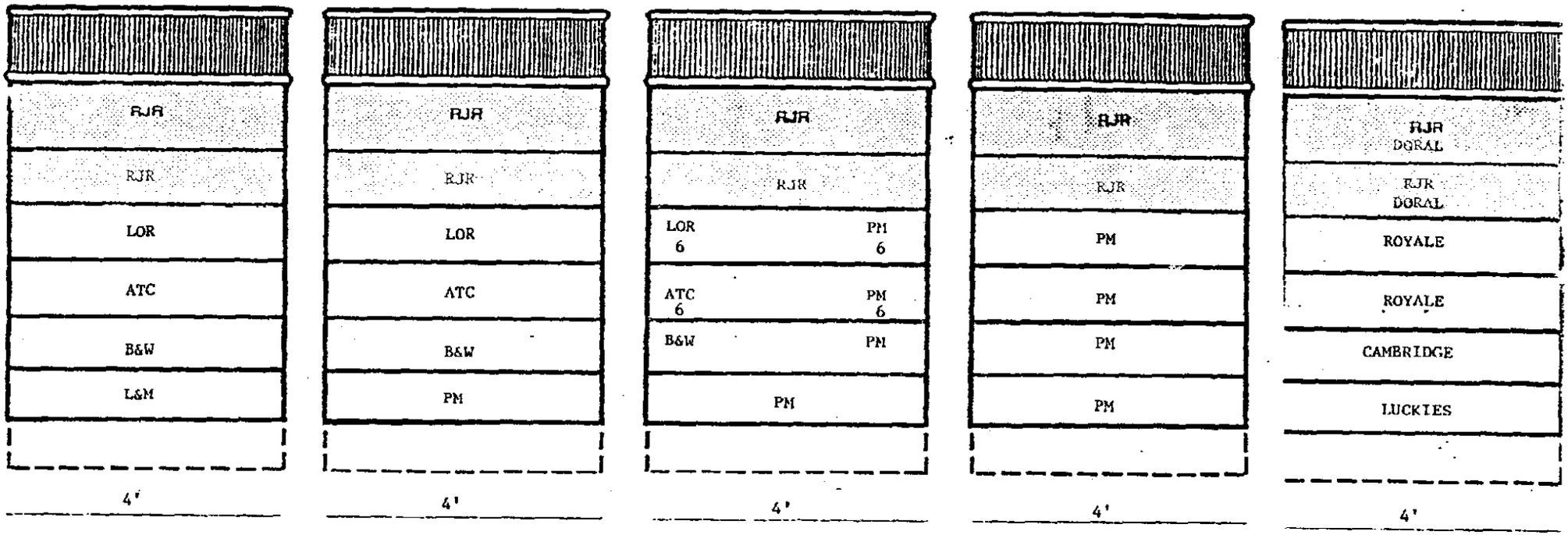

Specifications

Configuration Size 1' x 20'

Rows 360 Capacity 1920

RJR Shelf Plan D-104

Authorized By: E N Halcombe

Date: 6/1/87

Company

CO.	ROWS	$/MO.
RJR	104	312.
DORAL	26	40.
LOR	30	126.
B&W	30	93.
ATC	45	127.
PM	96	253.
CAMB.	13	39.
L&M	12	20.

$1010.00

MASTER FORM

Source: https://www.industrydocuments.ucsf.edu/docs/gmpn0000

A & P

Plan-O-Gram 1' x 16'

PLAN 28

STORE #

#558 - North Myrtle Beach, SC

51851 7349

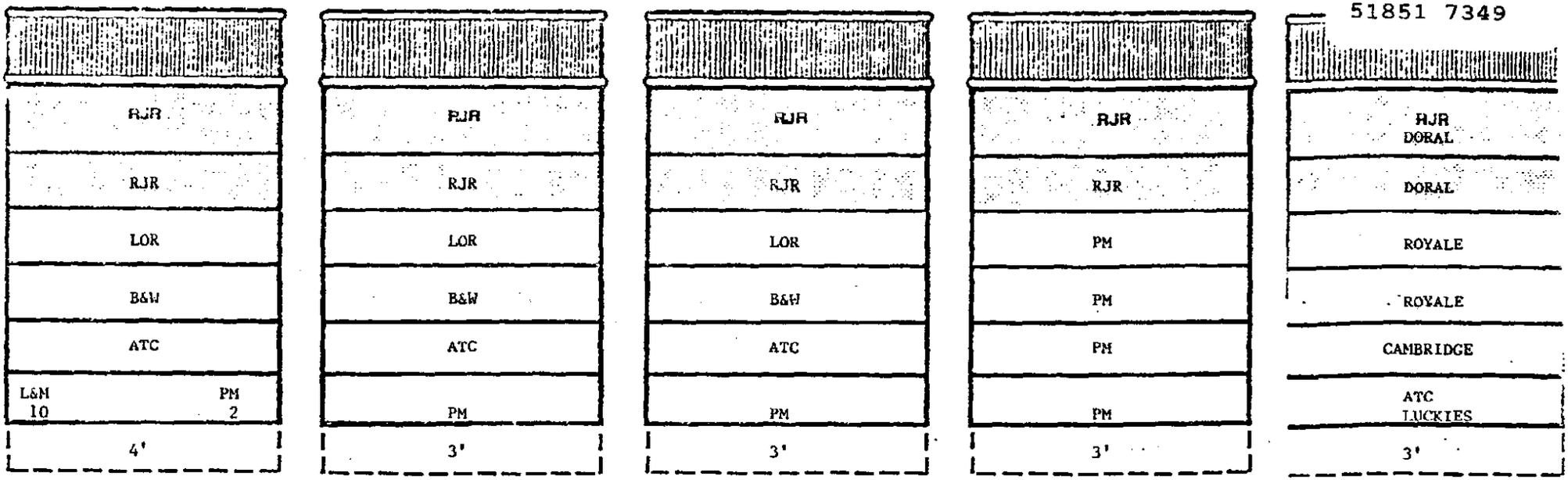

Specifications

Configuration Size 1' x 16' (3' Generic)

Rows _____ Capacity _____

RJR Shelf Plan D-80

Authorized By: G M Hawkins

Date: 6/1/87

Company

	ROWS	$/MO
DORALS	18	40.
RJR	80	240.
ATC	40	112.
B&W	30	93.
PM	56	93.
PL	30	126.
L&M	10	20.
CAMBRIDGE	9	27.
TOTAL		$751.00

MASTER FORM
RJRT Form 9269 - 5/86

Source: https://www.industrydocuments.ucsf.edu/docs/gmpn0000

A & P STORES | 1' x 15' | PLAN 29 | 51851 7350 | STORE #

RJR

Modular Carton Merchandising System
Plan-O-Gram

#238 - Morehead City, NC

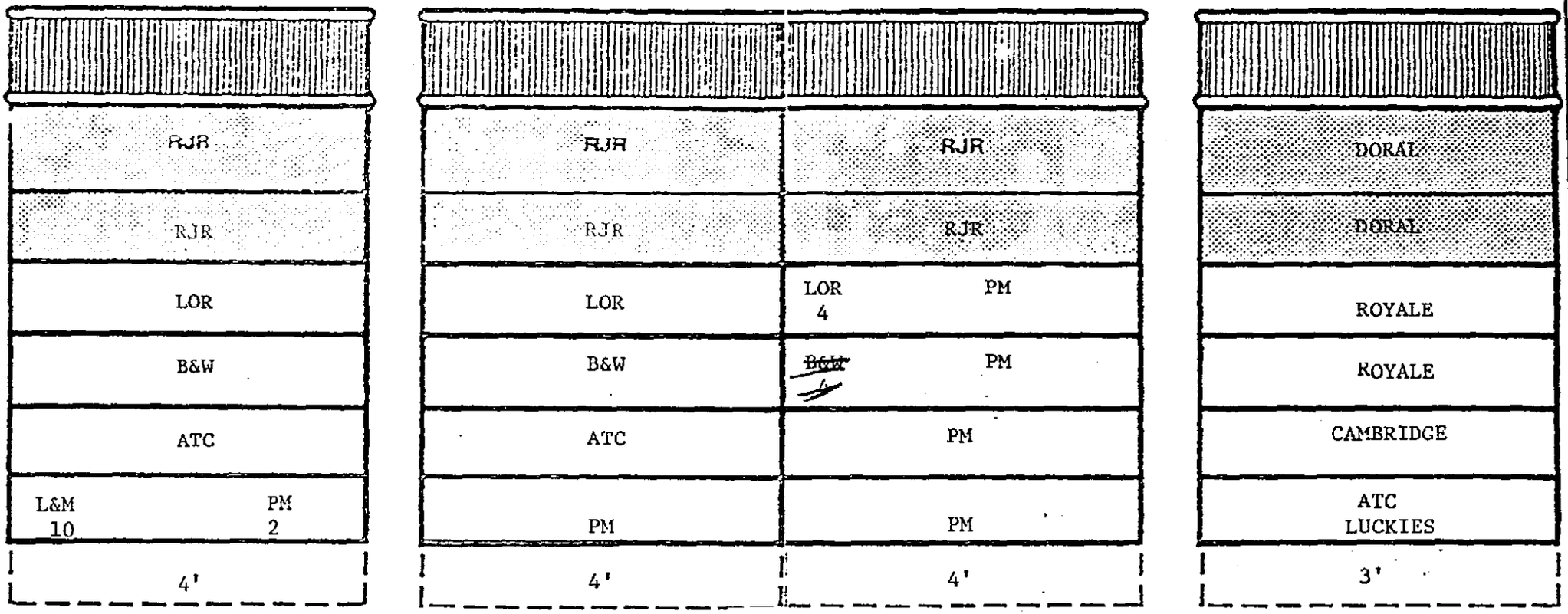

Specifications

Configuration Size: 1' x 15' (3' Generic)

Rows: _____ Capacity: _____

RJR Shelf Plan: D-78

Authorized By: E M Hollowell

Date: 6/1/87

Company	ROWS	$/MO.
DORAL	18	40.
RJR	78	234.
ATC	35	97.
B&W	~~26~~ 24	~~89.~~ 71
PM	~~61~~ 62	~~113.~~ 117
PL	28	116.
L&M	10	20.
CAMBRIDGE	9	~~33.~~ 36
TOTAL		~~$732.00~~ 731

Source: https://www.industrydocumentslibrary.ucsf.edu/docs/gmpn0000

RJR

A & P STORES

1' x 10'

PLAN 30

Modular Carton Merchandising System
Plan-O-Gram

STORE #

#214 - Fayetteville, NC
#253 - Southern Pine, NC

51851 7351

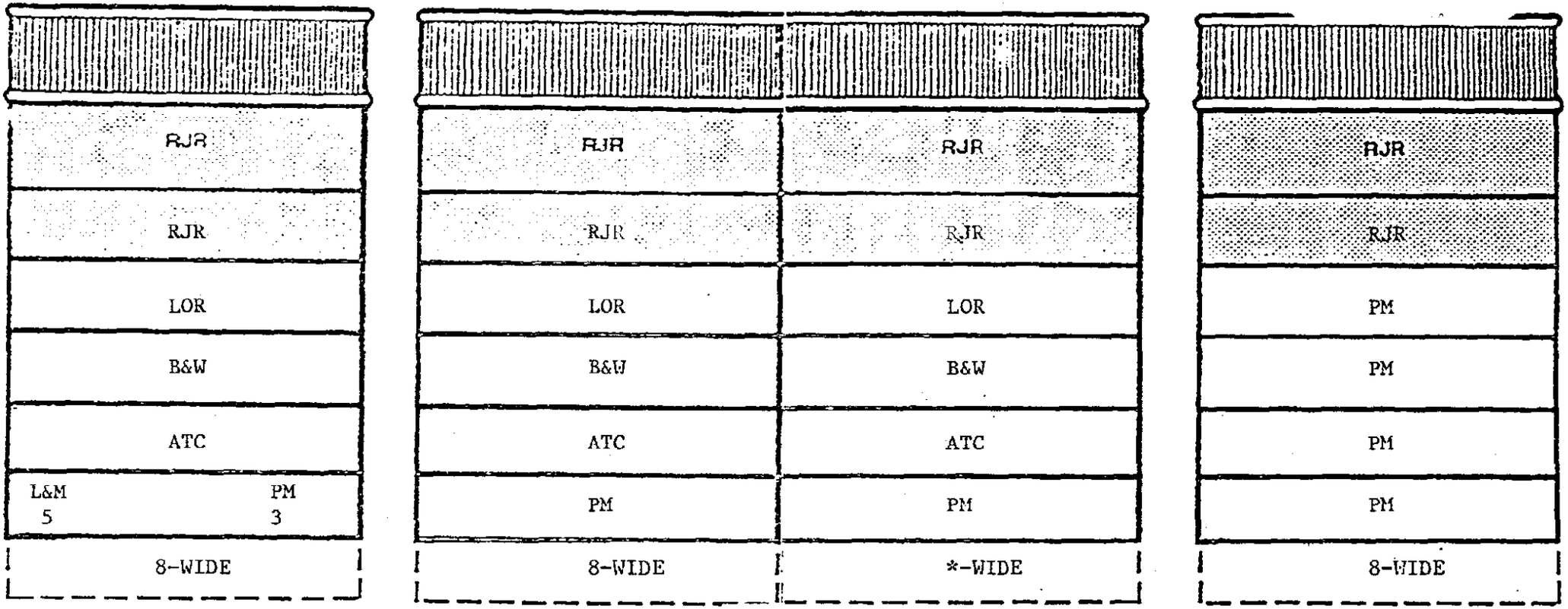

Specifications

Configuration Size 4 - 8-Wide

Rows _____ Capacity _____

RJR Shelf Plan D-64

Authorized By: E M Halcombe

Date: 6/1/67

Company	ROWS	$/MO.				
RJR	64	192.				
ATC	24	64.				
B&W	24	71.				
PM	51	73.				
PL	24	84.				
L&M	5	0				
		$484.00				

Source: https://www.industrydocuments.ucsf.edu/docs/gmph0000

A & P STORES

2 - 72D Carton Racks
5 Shelves High

PLAN 31

STORE #

#220 - Fayetteville, NC

51851 7352

Modular Carton Merchandising System
Plan-O-Gram

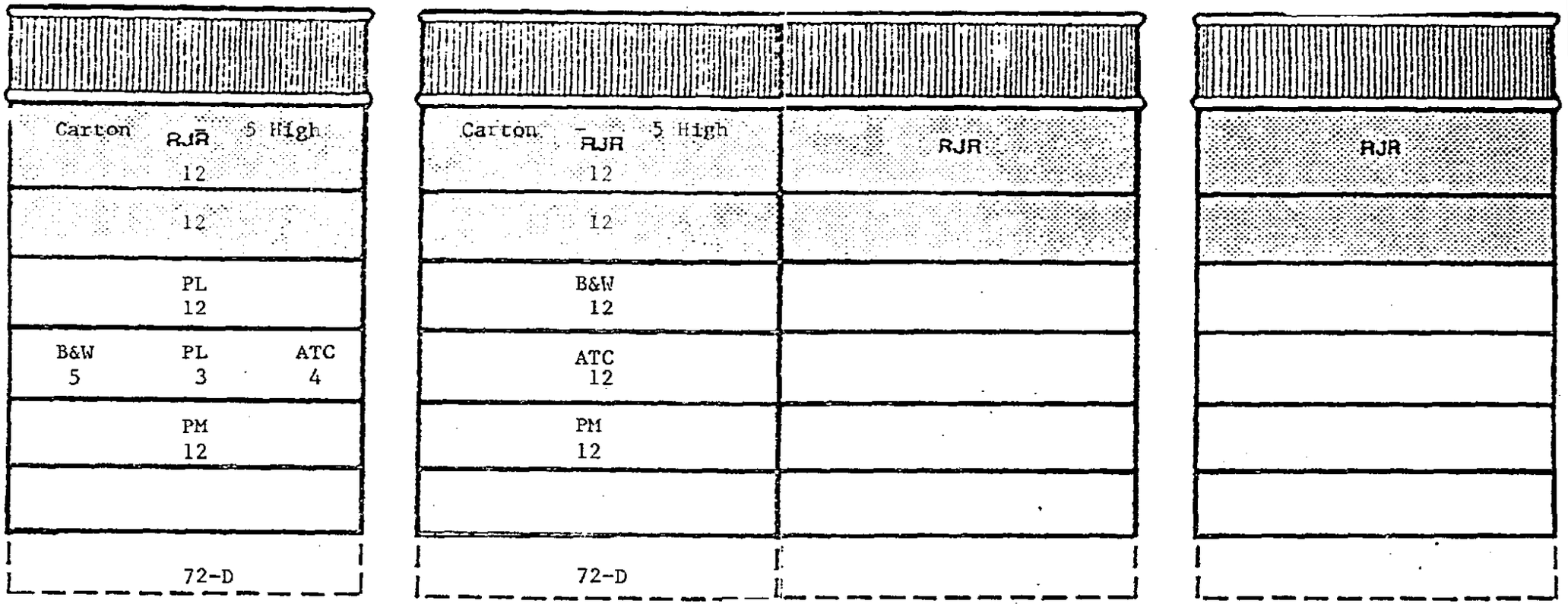

Specifications

Configuration Size 2 - 72D - Security

Rows 120 Capacity 600

RJR Shelf Plan D-48

Authorized By: E M Hackworth

Date: 6/1/82

Company	ROWS	$/MO.				
RJR	48	144.				
ATC	16	40.				
B&W	17	47.				
PM	24	0				
PL	15	53.				
L&M		$284.00				

Source: https://www.industrydocuments.ucsf.edu/docs/gmph0000

A & P STORES: #'s ,050,365, 520, 535

End Cap Carton Merchandising System
Plan-O-Gram

A & P STORES PLAN 32

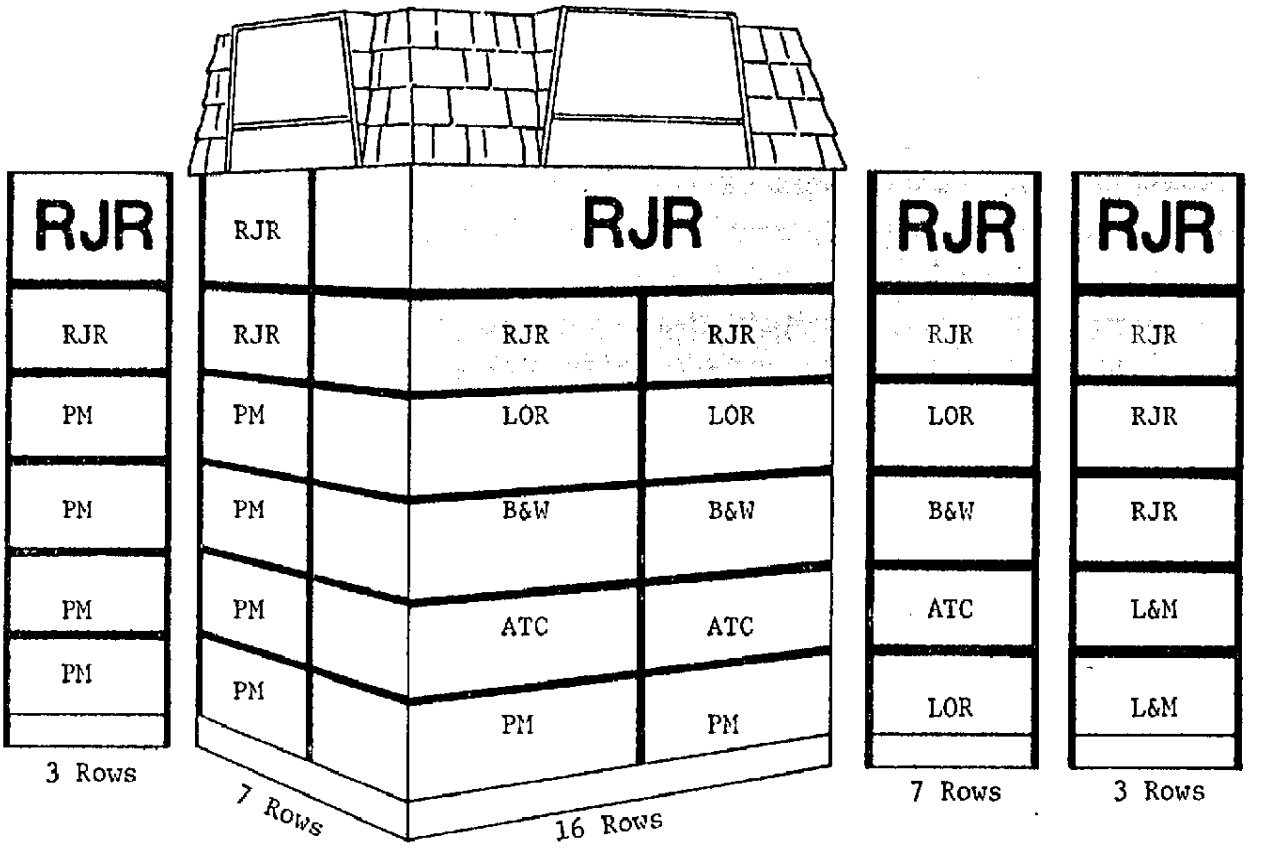

WOODGRAIN UNIVERSAL FIXTURE WITH 3 WIDE EXTENDERS

AUTHORIZED BY E. M. Halcombe

DATE 6/1/87

CO.	ROWS	$/MO.
RJR	78	$234.
LOR	30	114.
B&W	23	68.
ATC	23	61.
PM	56	93.
L&M	6	9.
		$579.00

Store #

#050 - Manning, SC
#365 - Sumter, SC

#520 - Conway, SC
#535 - Gastonia, NC

51851 7353

Source: https://www.industrydocuments.ucsf.edu/docs/gmpn0000

A & P STORES 4' x 10' PLAN 33

(includes end cap package fixtures)

RJR FLEX system

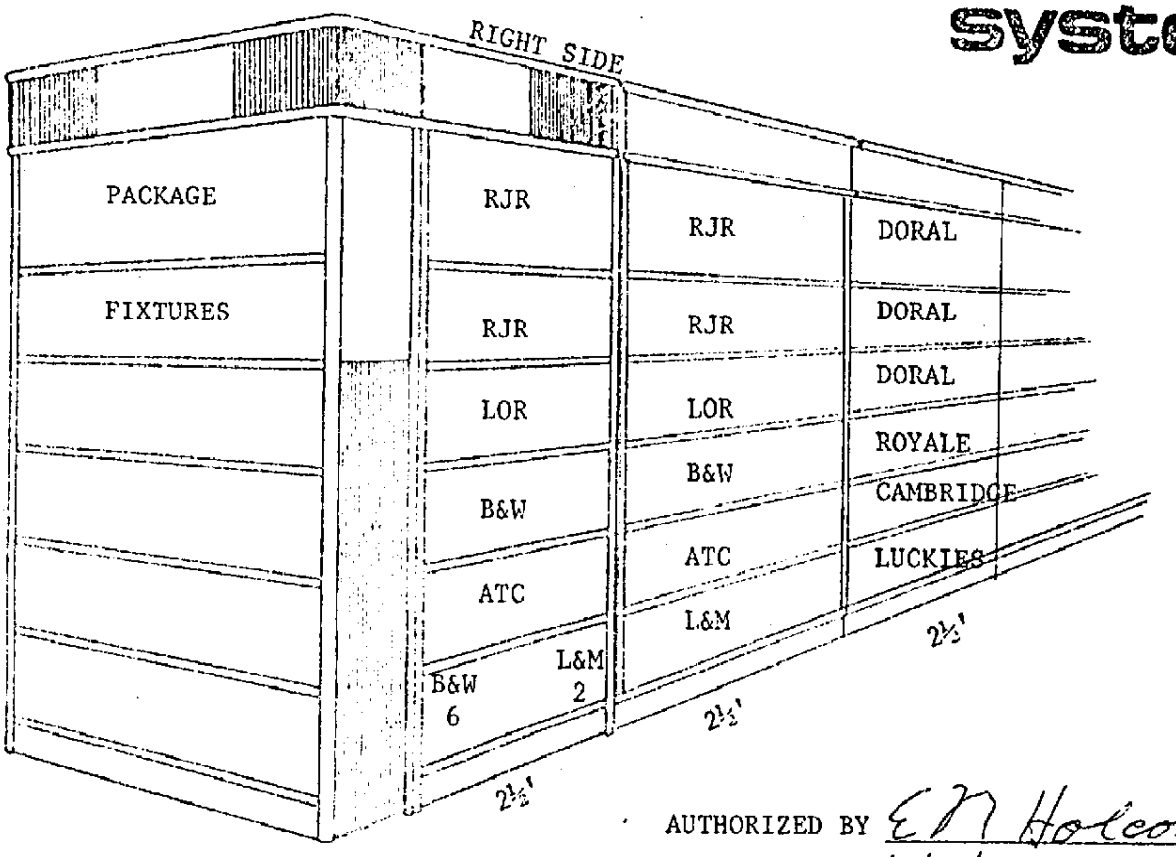

AUTHORIZED BY E M Holcombe

DATE 6/1/87

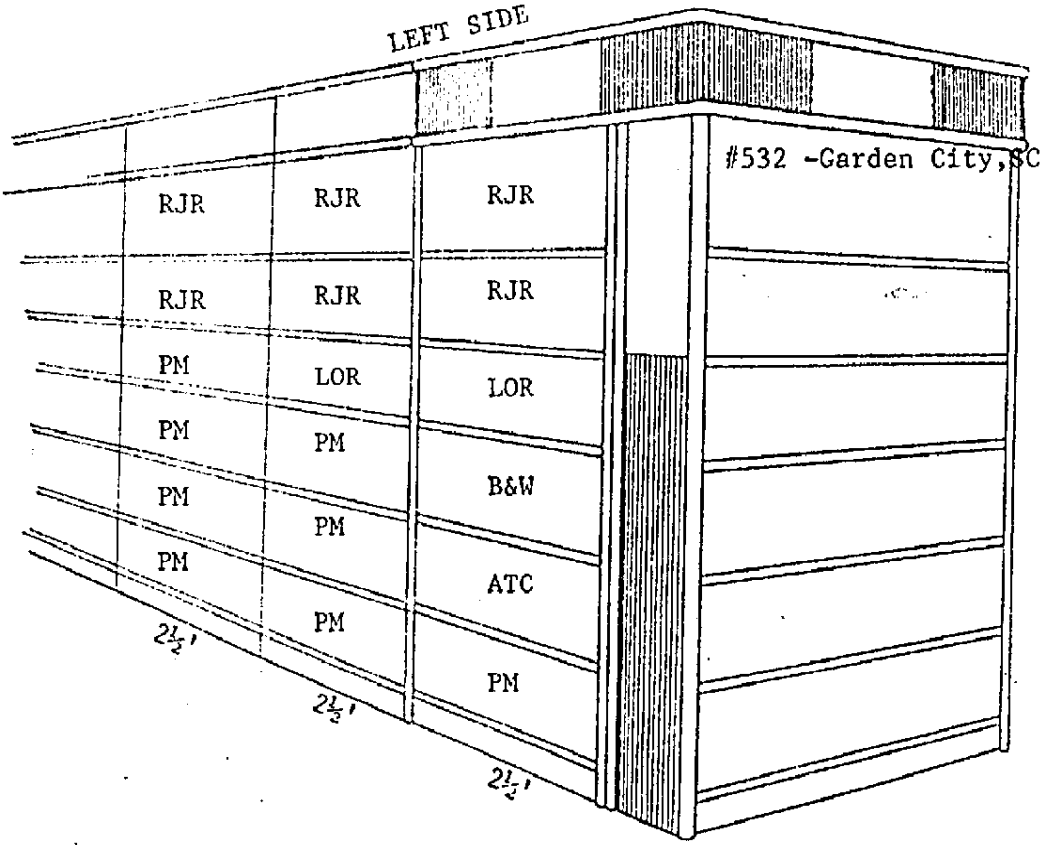

CO.	ROWS	$/MO
RJR	80	240.
(Doral)	24	40.
LOR	32	124.
B&W	30	93.
ATC	32	88.
PM	56	93.
(CAMB)	8	24.
L&M	10	20.
		$722

51851 7354

Source: https://www.industrydocuments.ucsf.edu/docs/gmpn0000